DYVA 东盐阀门 DONGYAN VALVE
国阀品质 东盐匠心
NATIONAL VALVE QUALITY DONGYAN CRAFTSMANSHIP

BUTTERFLY VALVE SERIES
蝶阀系列

为各领域提供全套阀门解决方案！

聚焦客户关注的挑战和压力,提供有竞
争力的工程产品和高品质的工程服务,
持续为客户创造最大价值。

三偏心多层次硬密封蝶阀
Three eccentric multi-level hard seal butterfly valve

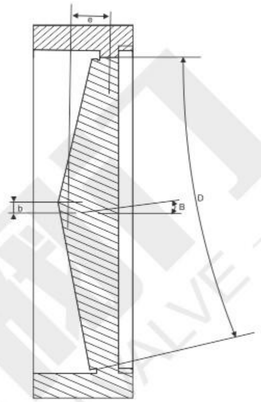

用途

本蝶阀系吸收、消化国外技术，采用三维偏心多层次金属密封结构，适用介质温度≤550℃冶金、电力、石油化工以及给排水等管道上作调节流量和截断流体的最佳装置。

Uses

The valve system to absorb, digest foreign technology, using three-dimensional eccentric multi-level metal seal structure, applicable to medium temperature = 550 ℃ metallurgy,electric power, petrochemical, as well as to the drainage pipe for regulating fluid flow and cut off the best device.

特点

1、蝶板密封圈为软硬层叠式金属片，具有金属硬密封和弹性密封的双重优点，无论在低温和高温情况下，均具有优良的密封性能。
2、采用三维偏心结构，阀座与蝶板几乎无磨擦，具有越关越紧的密封功能。
3、阀体密封面，采用堆焊不锈钢、钴基硬质合金，密封面耐磨损，使用寿命长。
4、结构独特，操作灵活、省力、方便、不受介质压力的高、低影响，密封性能可靠，使用寿命长。
通常的双偏心蝶阀像b（偏离管道中心)和a(偏离密封面中心线)所示的那样，目的是减少阀座与密封件之间大约15° 行程的摩擦。
HPV增加了一个独特的偏心角β，倾斜的锥形不仅克服了阀门启闭中密封件和阀座之间 所有接触摩擦，从而增加使用寿命，而且通过外加力矩的改变可以任意调整其密封比压，使密封更为可靠，绝不出现过关现象。

Feature

1、butterfly plate seal for the hard and soft layering pieces of metal with a metal seal and flexible seal the dual advantage of both low and high temperature cases, both with excellent sealing performance.
2、using three-dimensional eccentric structure, valve seat and butterfly plate almost no friction, with the more closed more tight sealing function.
3、valve sealing surface, using welding stainless steel, cobalt-based alloy, sealing surface wear resistance and long service life.
4、The structure is unique, the operation nimble, reduces effort, conveniently, the medium pressure high, the low influence, the sealing property not to be unreliable, the service life is long.The usual double eccentric butterfly valve, as b (deviate from the pipe center) and a (deviate from the sealing surface of the centerline) as shown in the aim of reducing valve seat and seal between the friction of approximately 15 ° travel.
HPV adds a unique eccentric angle β , slope of the cone not only overcome the valve open and close the seal and the seat all contacts between the friction, thereby increasing the service life, but also through changes in torque can be applied arbitrarily to adjust their seal over pressure, so that more reliable seal and never pass phenomenon occurs.

采用标准 Standard

制造标准 Manufacturing Standard	JB/T 8527-97	法兰标准Flange Standard	GB 9113
结构长度标准 Structure the length of the standard GB	GB 12221-89	检验标准Test Standard	GB/T 13927-92

主要性能规范 Main Performance Specifications

公称通径 Nominal size	DN(mm)	50～2000				50～500
公称压力Nominal Pressure	PN(MPa)	0.6	1.0	1.6	2.5	4.0
试验压力Test Pressure	强度试验Strength test	0.9	1.5	2.4	3.75	6.0
	密封试验Seal test	0.66	1.1	1.76	2.75	4.4
	气密封试验Gas seal test	0.6	0.6	0.6	0.6	0.6
渗漏率leakage	＜0.1×DNmm3/s(符合GB/T 13927-92标准) ＜0.1×DNmm3/s(in line with GB/T 13927-92 standard)					
适用温度suitable temperature	碳钢：-29℃～425℃；不锈钢、铬钼钢：-40℃～550℃ Stainless steel、chrome molybdenum steel：-40℃～550℃					
适用介质applicable medium	空气、水、蒸气、煤气、油品以及酸、碱、盐带有弱腐蚀性介质等 Air, water, steam, gas, oil and acid, alkali, salt with a weal corrosive media, etc.					
驱动形式drive type	蜗杆蜗轮传动、电传动 Worm worn transmission, electric transmission					

主要零件材料 Main components material

零件名称Part name	材料 Material	零件名称Part name	材料 Material
阀体Body	碳钢、不锈钢、铬钼钢、合金钢 Carbon steel, stainless steel, chrome molybdenum steel, alloy steel	阀杆Stem	2Cr13、1Cr13不锈钢、铬钼钢 2Cr13, 1Cr13 stainless steel, chrome molybdenum steel
蝶板Disc	碳钢、合金钢、不锈钢、铬钼钢 Carbon steel, alloy steel, stainless steel, chrome molybdenum steel	轴承Bearing	奥氏体不锈钢、304氮化 Austenitic stainless steel, 304 nitride
密封圈Ring	不锈钢与耐高温石棉板组合成多层次 Stainless steel and high temperature asbestos combined into multi-level	填料packing	柔性石墨 Flexible graphite

D373H.Y.F-10~25C.P.R.I

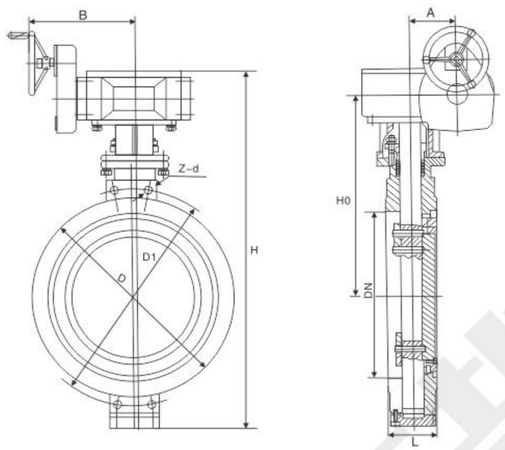

主要连接尺寸 Main connection dimensions

标准值 normal						参考值 reference				
PN	DN	L	D	D1	Z-d	H	H0	A	B	W(kg)
1.0 Mpa	50	43	99	125	4-18	170	130	45	120	6.6
	65	46	118	145	4-18	170	145	45	120	8.2
	80	49	132	160	4-18	230	152	45	120	10.2
	100	64	156	180	4-18	320	192	45	120	13.6
	125	70	184	210	4-18	345	200	45	120	17.3
	150	70	211	240	4-22	385	230	66	150	22.3
	200	71	266	295	4-22	471	297	85	170	43.2
	250	76	319	350	4-22	533	327	85	170	63
	300	83	370	400	4-22	606	364	106	205	104.1
	350	92	420	460	4-22	694	404	106	205	133
	400	102	480	515	4-26	757	444	130	240	180
	450	114	530	565	4-26	814	472	155	240	236
	500	127	582	620	4-26	902	522	169	306	290
	600	154	682	725	4-30	1048	590	198	324	419
	700	165	704	840	4-30	1277	810	220	335	539
	800	190	901	950	4-33	1385	844	241	356	656
	900	203	1001	1050	4-33	1490	890	241	356	788
	1000	216	1112	1160	4-36	1620	950	241	356	887
1.6 Mpa	50	43	99	125	4-18	170	130	45	120	6.6
	65	46	118	145	4-18	170	145	45	120	8.2
	80	49	132	160	4-18	230	152	45	120	10.2
	100	64	156	180	4-18	320	192	45	120	13.6
	125	70	184	210	4-18	345	200	45	120	17.3
	150	70	211	240	4-22	385	230	66	150	22.3
	200	71	266	295	4-22	471	297	85	170	43.2
	250	76	319	355	4-26	533	327	85	170	63

标准值 normal						参考值 reference				
PN	DN	L	D	D1	Z-d	H	H0	A	B	W(kg)
1.6 Mpa	300	83	370	410	4-26	606	364	106	205	104.1
	350	92	429	470	4-26	694	404	106	205	133
	400	102	480	525	4-26	757	444	130	240	180
	450	114	530	585	4-30	814	472	155	240	236
	500	127	582	650	4-30	902	522	169	306	290
	600	154	682	770	4-33	1048	590	198	324	419
	700	165	794	840	4-36	1277	810	220	335	539
	800	190	901	950	4-36	1385	844	241	356	656
	900	203	1001	1050	4-39	1490	890	241	356	788
	1000	216	1112	1170	4-39	1620	950	241	356	887
2.5 Mpa	50	43	99	125	4-42	170	130	45	120	17.5
	65	46	118	145	4-18	170	145	45	120	22.2
	80	49	132	160	4-18	310	233	206	90	30.5
	100	64	156	190	4-18	343	242	206	120	36.6
	125	70	184	220	4-22	385	254	206	120	44.3
	150	70	211	250	4-26	481	320	206	475	46.2
	200	71	274	310	4-26	547	355	442	610	92.3
	250	76	330	370	4-26	621	389	442	610	140.6
	300	83	389	430	4-30	653	423	558	670	166.5
	350	92	465	510	4-30	730	463	558	670	188.3
	400	102	535	585	4-33	810	495	491	1120	254
	450	114	560	610	4-36	850	566	687	1120	311
	500	127	615	670	4-36	940	630	687	1120	413
	600	154	735	795	4-39	1150	727	710	1456	518
	700	165	820	875	4-36	1328	823	710	1456	768
	800	190	928	990	4-39	1452	910	710	1456	937

注：可根据ANSI、JIS、DIN标准及非标尺寸生产。
Note: according to ANSI, JIS, DIN standards and production of non-standard size.

D343H.Y.F-10~16C.P.R.I

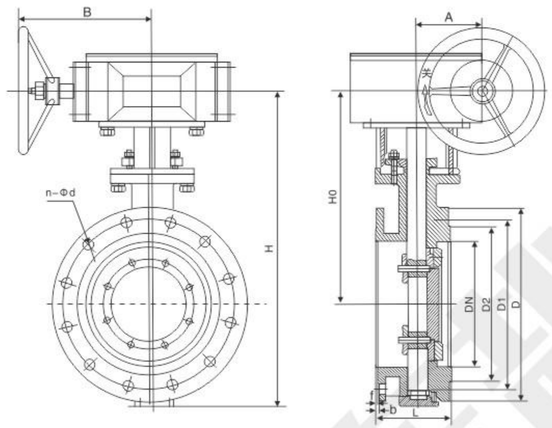

主要连接尺寸 Main connection dimensions

标准值 normal									参考值 reference				
PN	DN	L	D	D1	D2	Z-d	b	f	H	H0	A	B	W(kg)
1.0 Mpa	50	108	165	125	99	4-18	20	2	170	130	45	120	7
	65	112	185	145	118	4-18	20	2	170	145	45	120	9.2
	80	114	200	160	132	8-18	20	2	230	152	45	120	11.6
	100	127	220	180	156	8-18	22	2	320	192	45	120	14
	125	140	250	210	184	8-18	22	2	345	200	45	120	18
	150	140	285	240	211	8-22	24	2	385	230	66	150	23
	200	152	340	295	266	8-22	24	2	471	297	85	170	44
	250	165	405	355	319	12-22	26	2	533	327	85	170	64
	300	178	445	400	370	12-22	26	2	606	364	106	205	105
	350	190	505	460	429	16-22	26	2	694	404	106	205	134
	400	216	565	515	480	16-26	26	2	757	444	130	240	181
	450	222	615	565	530	20-26	28	2	814	472	155	240	237
	500	229	670	620	582	20-26	28	2	902	522	169	306	292
	600	267	780	725	682	20-30	34	2	1048	590	198	324	421
	700	292	895	840	794	24-30	34	5	1277	810	220	335	541
	800	318	1015	950	901	24-33	36	5	1385	844	241	356	658
	900	330	1115	1050	1001	28-33	38	5	1490	890	241	356	790
	1000	410	1230	1160	1112	28-36	38	5	1620	950	241	356	890
1.6 Mpa	50	108	165	125	99	4-18	20	2	170	130	45	120	7
	65	112	185	145	118	4-18	20	2	170	145	45	120	9.2
	80	114	200	160	132	8-18	20	2	230	152	45	120	11.6
	100	127	220	180	156	8-18	22	2	320	192	45	120	14
	125	140	250	210	184	8-18	22	2	345	200	45	120	18
	150	140	285	240	211	8-22	24	2	385	230	66	150	23
	200	152	340	295	266	12-22	24	2	471	297	85	170	44
	250	165	405	355	319	12-26	26	2	533	327	85	170	64

注：可根据ANSI、JIS、DIN标准及非标尺寸生产。
Note: according to ANSI, JIS, DIN standards and production of non-standard size.

D343H.Y.F-10~16~40C.P.R.I

主要连接尺寸 Main connection dimensions

	标准值 normal							参考值 reference					
PN	DN	L	D	D1	D2	Z-d	b	f	H	H0	A	B	W(kg)
1.6 Mpa	300	178	460	410	370	12-26	28	2	694	364	106	205	105
	350	190	520	470	429	16-26	30	2	606	404	106	205	134
	400	216	580	525	480	16-30	32	2	757	444	130	240	181
	450	222	640	585	548	20-30	40	2	814	472	155	240	237
	500	229	715	650	609	20-33	44	2	902	522	169	306	292
	600	267	840	770	720	20-36	54	2	1048	590	198	324	421
	700	292	910	840	794	24-36	40	5	1277	810	220	335	541
	800	318	1025	950	901	24-39	42	5	1385	844	241	356	658
	900	330	1125	1050	1001	28-39	44	5	1490	890	241	356	790
	1000	410	1225	1170	1112	28-42	46	5	1620	950	241	356	890
2.5 Mpa	50	108	165	125	99	4-18	20	2	170	130	45	120	13
	65	112	185	145	118	8-18	22	2	265	210	35	90	15
	80	114	200	160	132	8-18	24	2	310	233	35	90	19
	100	127	235	190	156	8-22	24	2	343	242	45	120	23
	125	140	270	220	184	8-26	26	2	385	254	45	120	45
	150	140	300	250	211	8-26	28	2	445	580	66	150	66
	200	152	360	310	274	12-26	30	2	510	297	85	170	107
	250	165	425	370	330	12-30	32	2	569	339	85	170	136
	300	178	485	430	389	16-30	34	2	653	375	106	205	185
	350	190	555	490	448	16-33	38	2	730	420	106	205	240
	400	216	620	550	503	16-36	40	2	810	463	130	240	294
	450	222	670	600	548	20-36	46	2	850	495	155	240	423
	500	229	730	660	609	20-36	48	2	940	566	169	306	546
	600	267	845	770	720	20-39	58	2	1150	630	198	324	660
	700	292	960	875	820	24-42	50	5	1195	727	220	335	795
	800	318	1085	990	609	20-36	54	5	1268	810	45	356	894
4.0 Mpa	50	108	165	125	99	4-18	20	2	170	130	35	120	13
	65	112	185	145	118	8-18	22	2	265	210	35	90	15
	80	114	200	160	132	8-18	20	2	310	233	35	90	19
	100	127	235	190	156	8-22	24	2	343	242	45	120	25
	125	140	270	220	184	8-26	26	2	385	254	45	120	46
	150	140	300	250	211	8-26	28	2	445	280	66	150	67
	200	152	375	320	284	12-30	34	2	510	297	85	170	109
	250	165	450	385	345	12-33	38	2	569	339	85	170	138
	300	178	515	450	409	16-33	42	2	653	375	106	205	186
	350	190	580	510	465	16-36	46	2	730	420	106	205	241
	400	216	660	585	535	16-39	50	2	810	463	130	240	295
	450	222	685	610	560	20-39	57	2	850	495	155	240	424
	500	229	755	670	615	20-42	57	2	940	566	169	306	547
	600	267	890	795	735	20-48	72	2	1150	630	198	324	662
	700	292	995	900	835	24-54	68	5	1195	727	220	335	797
	800	318	1035	1030	960	24-58	76	5	1268	810	241	356	898

注：可根据ANSI、JIS、DIN标准及非标尺寸生产。
Note: according to ANSI, JIS, DIN standards and production of non-standard size.

$D\frac{3}{6}\frac{}{9}43H-\frac{40}{64}C$、P、R

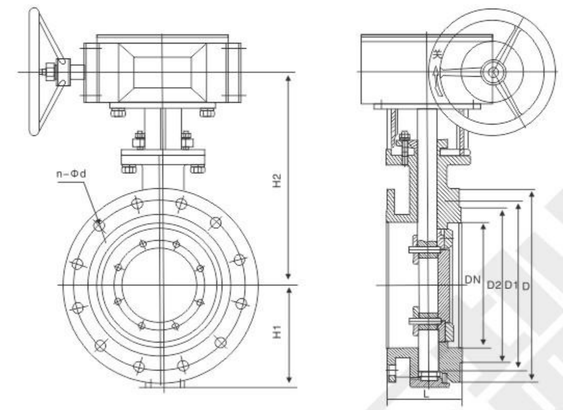

主要连接尺寸 Main connection dimensions

公称通径 DN(mm)	主要尺寸 Main dimensions			法兰尺寸和螺栓规格 Flange dimensions and bolt specifications							
				4.0MPa				6.4MPa			
	L	H1	H	D	D1	D2	n-Φd	D	D1	D2	n-Φd
100	190	285	107	235	190	156	8-22	250	200	156	8-26
125	200	300	123	270	220	184	8-26	295	211	184	8-30
150	240	320	140	300	250	211	8-26	345	280	244	8-33
200	230	370	180	375	320	284	12-30	415	345	284	12-36
250	250	420	200	450	385	345	12-33	470	400	345	12-36
300	270	500	250	515	450	409	16-33	530	460	409	16-36
350	290	530	270	580	510	465	16-36	600	525	465	16-39
400	310	570	300	660	585	535	16-39	670	585	535	16-42
450	330	600	320	685	610	560	20-39	685	610	560	20-42
500	350	680	360	755	670	615	20-42	800	705	640	20-54
600	390	750	420	890	795	735	20-48	930	820	750	20-58
700	430	880	480	995	900	835	24-48	/	/	/	/
800	470	1000	600	1140	1030	960	24-58	/	/	/	/

注：可根据ANSI、JIS、DIN标准及非标尺寸生产。
Note: according to ANSI, JIS, DIN standards and production of non-standard size

D363H-10-40C

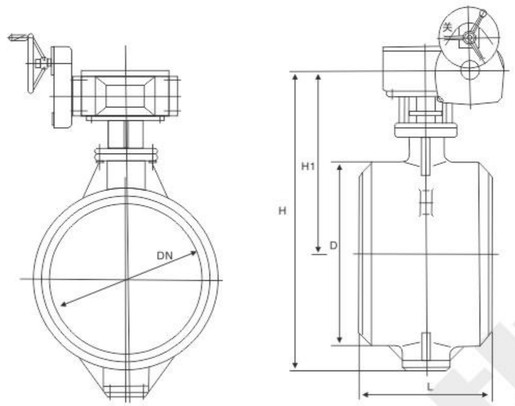

主要性能规范 Main Performance Specifications

公称压力PN(MPa)	强度试验Strength test（MPa）	密封试验Seal test（MPa）	适用温度（℃）Suitable temperature	适用介质 Applicable medium
1.0	1.5	1.1	≤425℃	水、蒸气、煤气、油品、热空气、天然气等介质 Water, steam, gas, oil, hot air, natural gas and other media
1.6	2.4	1.76		
2.5	3.8	2.75		
4.0	6.0	4.4		

主要零件材料 Main parts and materials

阀体、蝶板 Valve body, butterfly plate	阀杆Stem	密封圈Ring	填料packing
铸钢、铸不锈钢 Cast steel, cast stainless steel	不锈钢stainless steel	不锈钢+石墨片 Stainless steel + graphite sheet	柔性石墨Flexible Graphite

主要连接尺寸 Main connection dimensions

公称通径 DN(mm)	L	1.0MPa		1.6MPa		2.5MPa		4.0MPa	
		H1	H	H1	H	H1	H	H1	H
100	190	280	390	280	390	280	390	280	390
125	200	300	420	300	420	300	420	300	420
150	210	320	460	320	460	320	460	320	460
200	230	370	550	370	550	370	550	370	550
250	250	420	620	420	620	420	620	420	620
300	270	500	750	500	750	500	750	500	750
350	290	530	800	530	800	530	800	530	800
400	310	570	870	570	870	570	870	570	870
450	330	600	920	600	920	600	920	600	920
500	350	680	1040	680	1040	680	1040	680	1040
600	390	750	1190	750	1190	750	1190	750	1190
700	430	810	1290	810	1290	810	1290	/	/
800	470	905	1440	905	1440	905	1440	/	/
900	510	960	1550	960	1550	960	1550	/	/
1000	550	1010	1650	1010	1650	1010	1650	/	/
1200	630	1175	1920	1175	1920	1175	1920	/	/
1400	710	1310	2170	1310	2170	/	/	/	/
1600	790	1460	2440	1460	2440	/	/	/	/
1800	870	1560	2650	1560	2650	/	/	/	/
2000	950	1670	2860	1670	2860	/	/	/	/

用途

本蝶阀系吸收、消化国外技术，采用三维偏心多层次金属密封结构，适用介质温度≤600℃冶金、电力、石油化工、空气、煤气、可燃气体，以及给排水等介质管道上作调节流量和截断流体的最佳装置。

Uses

The valve system to absorb, digest foreign technology, using three-dimensional eccentric multi-level metal seal structure, applicable to medium temperature = 600 ℃ metallurgy, electric power, petrochemical, air, gas, combustible gas, and water supply and drainage pipes and other media to make adjustments on flow and The best cut off fluid device.

特点

本双向蝶阀采取多层次三偏心金属硬密封结构，不仅具有普通多层次三偏心金属硬密封蝶阀的全部优良性能，由于在设计上合理地减小了径向偏心值，在关闭状态下阀杆所受力矩较小，处于静平衡，同时，蝶板密封圈采用了优质碳素材料与高韧性不锈钢组成多层次结构，不仅柔中有刚能与阀座保持最代佳密合，而且具有非常良好的自动补偿功能，特别在较大温差的工况条件下，可以消除由此引起的结构变形对密封性能的影响，又由于在加工和装配过程采用了予应力方法，使阀门在反向受压时产生的相对位移得到充分补偿，因此本蝶阀不论正向或反向受压，均能在全额压差下达到泄漏量为零。

Feature

The multi-layered three-way valve to seal structure eccentricity metal hard, not only with general multi-level three metal seal eccentric butterfly valve all the excellent performance, reasonable because the design reduces the radial offset value, in the closed state Fa pole moment suffered less in static balance, while the disc sealing ring used with high quality carbon material toughness of stainless steel multi-level structure, not only have soft valve seat just to keep with the most on behalf of the good seal, but also very good automatic compensation function, in particular the large temperature differences of working conditions, it can eliminate the structural deformation of the resulting impact on the sealing performance, but also due to processing and assembly process used to stress ways in which the valve in the anti- When the pressure generated by relative displacement of full compensation, so the valve, whether positive or negative pressure, can achieve the full amount of leakage under pressure to zero.

采用标准 Standard

制造标准 Manufacturing Standards	JB/T 8527-97	法兰标准Flange Standard	GB9113
结构长度标准 Structure of the length of the standard	GB 12221-89	检验标准Test Standard	GB/T 13927-92

主要性能规范 Main Performance Specifications

公称通径Nominal designs	DN(mm)	50-2000				50～500
公称压力Nominal Pressure	PN(MPa)	0.6	1.0	1.6	2.5	4.0
试验压力Test Pressure	强度试验Strength test	0.9	1.5	2.4	3.75	6.0
	正向密封试验Forward seal test	0.66	1.1	1.76	2.75	4.4
	反向密封试验Reverse seal test	0.66	1.1	1.76	2.75	4.4
	气密封试验Gas seal test	0.6	0.6	0.6	0.6	0.6
渗漏率Leakage	<0.1×DNmm3/s(符合GB/T 13927-92标准) Comply with GB / T 13927-92 standard)					
适用温度Suitable temperature	碳钢：-29℃～260℃；不锈钢、铬钼钢：-40℃～550℃ Stainless steel, chrome molybdenum steel: -40℃～550℃					
适用介质Applicable medium	空气、水、蒸气、煤气、油品以及酸、碱、盐带有弱腐蚀性介质等 Air, water, steam, gas, oil and acid, alkali, salt with a weak corrosive media, etc.					
驱动形式Drive Type	蜗杆蜗轮传动、电传动 Worm worn transmission, electric transmission					

主要零件材料 Main components material

零件名称Part Name	材料 Materials	零件名称Part Name	材料 Materials
阀体Body	碳钢、不锈钢、铬钼钢、合金钢 Carbon steel, stainless steel, chrome molybdenum steel, alloy steel	阀杆Stem	2Cr13、1Cr13不锈钢、铬钼钢 Stainless steel, chrome molybdenum steel
蝶板Disc	碳钢、合金钢、不锈钢、铬钼钢 Carbon steel, alloy steel, stainless steel, chrome molybdenum steel	轴承Bearing	奥氏体不锈钢、304氮化 Austenitic stainless steel, 304 nitride
密封圈Ring	不锈钢与耐高温石墨片组合成多层次 Stainless steel and high-temperature graphite sheet to form a multi-level	填料Packing	柔性石墨 Flexible Graphite

D343Hs-$^{6}_{10}$C、P、R

D373Hs-$^{6}_{10}$C、P、R

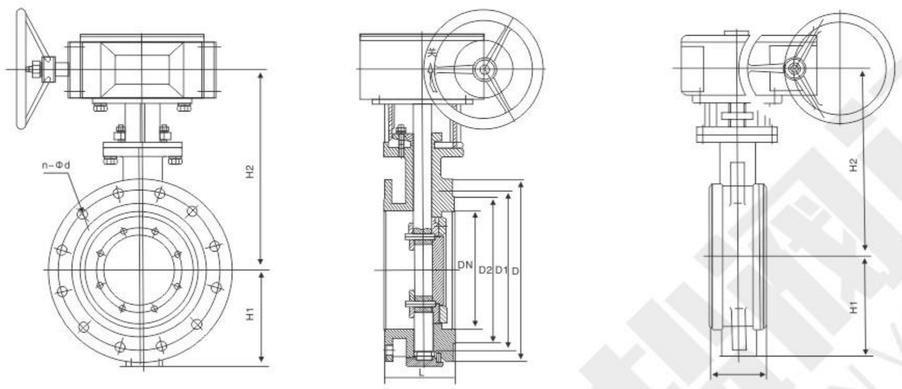

主要连接尺寸 Main connection dimensions

公称通径 DN(mm)	主要尺寸 Main dimensions				法兰尺寸和螺栓规格 Flange dimensions and bolt specifications							
					0.6MPa				1.0MPa			
	L	L1	H2	H1	D	D1	D2	n-Φd	D	D1	D2	n-Φd
100	127	56	285	107	210	170	144	4-19	220	180	156	8-18
125	140	64	300	123	240	200	174	8-19	230	210	184	8-18
150	140	70	320	140	265	225	199	8-19	285	240	211	8-18
200	152	71	370	180	320	280	254	8-19	340	295	266	8-22
250	165	76	420	200	375	335	309	12-19	395	350	310	12-22
300	178	83	500	250	440	395	363	12-23	445	400	370	12-22
350	190	92	530	270	490	445	413	12-23	505	460	429	16-22
400	216	102	570	300	540	495	463	16-23	565	515	480	16-26
450	222	114	600	320	595	550	518	16-23	615	565	530	16-26
500	229	127	680	360	645	600	568	20-23	670	620	582	20-26
600	267	154	750	420	755	705	667	20-26	780	725	682	20-30
700	292	165	810	480	860	810	772	24-26	895	840	794	24-30
800	318	190	905	540	975	920	878	24-31	1015	950	901	24-33
900	330	203	960	590	1075	1020	978	24-31	1115	1050	1001	28-33
1000	410	216	1010	640	1175	1120	1078	28-31	1230	1160	1112	28-36
1200	470	254	1175	750	1405	1340	1295	32-34	1455	1380	1328	32-39
1400	530	/	1310	860	1630	1560	1510	36-37	1675	1590	1530	36-42
1600	600	/	1460	980	1830	1760	1710	40-37	1915	1820	1750	40-48
1800	670	/	1560	1090	2045	1970	1918	44-40	/	/	/	/
2000	760	/	1670	1190	2265	2180	2125	48-43	/	/	/	/

注：可根据ANSI、JIS、DIN标准及非标尺寸生产。
Note: according to ANSI, JIS, DIN standards and production of non-standard size.

DYVA 东盐阀门 DONGYAN VALVE
国阀品质 东盐匠心
法兰式双向金属硬密封蝶阀 / 对夹式双向金属硬密封蝶阀
Flange type bidirectional metal hard seal butterfly valve
Wafer bidirectional metal hard seal butterfly valve

D343Hs-$^{6}_{25}$C、P、R

D373Hs-$^{6}_{25}$C、P、R

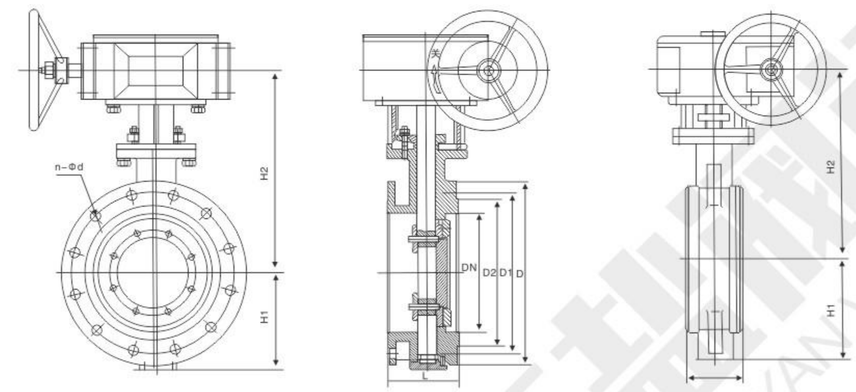

主要连接尺寸 Main connection dimensions

公称通径 DN(mm)	主要尺寸 Main dimensions				法兰尺寸和螺栓规格 Flange dimensions and bolt specifications							
					1.6MPa				2.5MPa			
	L	L1	H2	H1	D	D1	D2	n-Φd	D	D1	D2	n-Φd
100	127	56	285	107	220	180	156	8-18	235	190	156	8-22
125	140	64	300	123	250	210	184	8-18	270	220	184	8-26
150	140	70	320	140	285	240	211	8-22	300	250	211	8-26
200	152	71	370	180	340	295	266	12-22	360	310	274	12-26
250	165	76	420	200	405	355	319	12-26	425	370	330	12-30
300	178	83	500	250	460	410	370	12-26	485	430	389	16-30
350	190	92	530	270	520	470	429	16-26	555	490	448	16-33
400	216	102	570	300	580	525	480	16-30	620	550	503	16-36
450	222	114	600	320	640	585	548	20-30	670	600	548	20-36
500	229	127	680	360	715	650	609	20-33	730	660	609	20-36
600	267	154	750	420	840	770	720	20-36	845	770	720	20-39
700	292	165	810	480	910	840	794	24-36	960	875	820	24-42
800	318	190	905	540	1025	950	901	24-39	1085	990	928	24-48
900	330	203	960	590	1125	1050	1001	28-39	/	/	/	/
1000	410	216	1010	640	1255	1170	1112	28-42	/	/	/	/
1200	470	254	1175	750	1485	1390	1328	32-48	/	/	/	/

注：可根据ANSI、JIS、DIN标准及非标尺寸生产。
Note: according to ANSI, JIS, DIN standards and production of non-standard size.

产品简介与用途

双偏心四氟骨架密封蝶阀是介于软密封橡胶蝶阀和金属密封蝶阀之间的一种蝶阀，它既具有橡胶密封蝶阀良好的密封性能，又具有金属密封，耐温、耐压等特点。因此被广泛应用于介质温度≤180℃的石油、冶金、电力、市政工程、水厂等管道上，作定向控制介质流向的启闭机构。

特点

1、四氟阀座采用补偿性骨架，彻底克服了四氟材料热胀冷缩带来的不利影响。
2、蝶板密封面采用三维抛物线曲面，蝶板流线造型，流体阻力小、运行流畅。
3、阀座与阀体分装，便于维修、调整和装配。
4、流量特性趋于正比例特性、调节性能好，在0° ~90° 范围内可任意调节流量。

Products and uses

Double eccentric butterfly valve lies between the PTFE sealing the soft skeleton rubber seal and metal sealing butterfly valve butterfly valve between a butterfly, both with a rubber sealing butterfly valve a good sealing performance, but also has metal seals, heat resistant pressure and so on. Which is widely used in medium temperature = 180 ℃ oil, metallurgy, electric power, municipal engineering, water and other pipe for directional control of media flows hoist body.

Feature

1、PTFE valve seat by a compensatory framework, PTFE material completely overcome the adverse effects of thermal expansion and contraction.
2、The disc sealing surface of three-dimensional parabolic surface, the disc flow line modeling, fluid resistance small, run smoothly.
3、Valve seat and valve-packing, easy maintenance, adjustment and assembly.
4、Flow characteristics tend to feature direct proportion to regulate the performance, in the 0° ~ 90 ° range can be adjusted flow.

主要性能规范 Main Performance Specifications

公称通径DN(mm)		50～1000	
公称压力PN(mm)		1.0MPa	1.6MPa
试验压力 Test pressure	强度Intensity	1.5MPa	2.4MPa
	密封Seal	1.1MPa	1.76MPa
适用温度Suitable temperature		-29℃～180℃	
适用介质Applicable medium		适用介质空气、蒸汽、水、油类、酸、碱、盐等（介质不含过多颗粒杂质） Air, steam, water, oil, acid, alkali, salt, etc. (medium, without excessive particle impurities)	
驱动方式Drive Mode		驱动方式手柄、蜗轮传动、电动、气动、液动 Handle, worm gear drive, electric, pneumatic, hydraulic	

主要零件材料 Main parts and materials

零件名称Part Name	阀体Body	蝶板Butterfly Plate	阀杆Stem	密封圈Ring	填料Packing
材料Material	碳钢、不锈钢、球墨铸铁 Carbon steel, stainless steel, Iron	碳钢、不锈钢、球墨铸铁（密封面堆焊、镀硬铬） Carbon steel, stainless steel, Iron(Sealing surface welding, hard chrome plated)	不锈钢Stainless	四氟骨架密封圈 PTFE ring skeleton	柔性石墨 Flexible Graphite

D$^{3}_{6}{}_{9}$73F-$^{10}_{16}{}_{25}$C、P、R

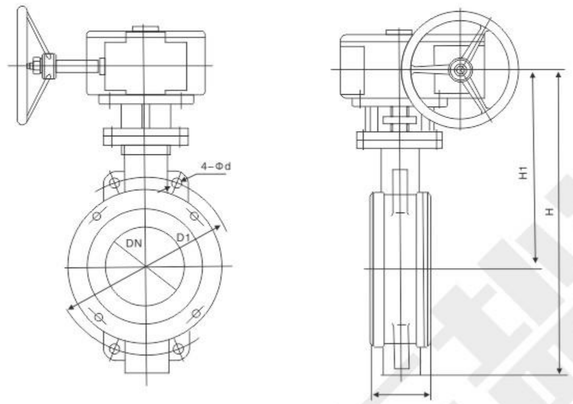

主要连接尺寸 Main connection dimensions

公称通径 DN(mm)	主要尺寸 Main dimensions			法兰尺寸和螺栓规格Flange dimensions and bolt specifications					
				1.0MPa		1.6MPa		2.5MPa	
	L	H1	H	D1	n-Φd	D1	n-Φd	D1	4-Φd
50	43	255	340	125	4-18	125	4-18	125	4-18
65	46	280	370	145	4-18	145	4-18	145	4-18
80	49	285	385	160	4-18	160	4-18	160	4-18
100	56	310	430	180	4-18	180	4-18	190	4-22
125	64	310	440	210	4-18	210	4-18	220	4-26
150	70	315	475	240	4-23	240	4-22	250	4-26
200	71	380	590	295	4-23	295	4-22	310	4-26
250	76	460	710	350	4-23	355	4-26	370	4-30
300	83	475	725	400	4-23	410	4-26	430	4-30
350	92	510	830	460	4-23	470	4-26	490	4-33
400	102	550	900	515	4-25	525	4-30	550	4-36
450	114	590	970	565	4-25	585	4-30	600	4-36
500	127	610	1030	620	4-25	650	4-33	660	4-36
600	154	660	1150	725	4-30	770	4-36	770	4-39
700	165	730	1220	840	4-30	840	4-36	875	4-42
800	190	810	1300	950	4-34	950	4-39	990	4-48
900	203	930	1480	1050	4-34	1050	4-39	1090	4-48
1000	216	1020	1600	1160	4-34	1170	4-42	1210	4-56

注：可根据ANSI、JIS、DIN标准及非标尺寸生产。
Note: according to ANSI, JIS, DIN standards and production of non-standard size.

D$^{3}_{6}$43F-$^{10}_{16}$C、P、R

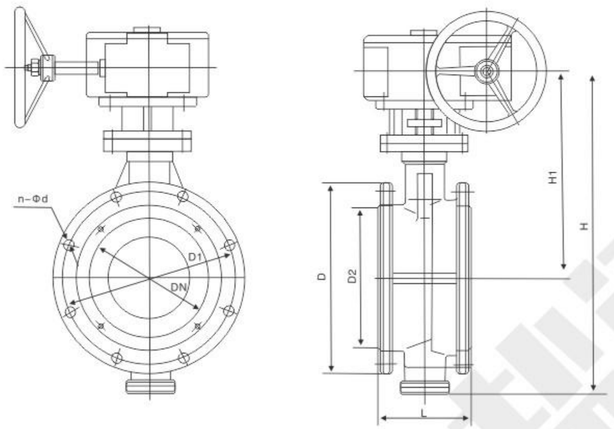

主要连接尺寸 Main connection dimensions

公称通径 DN(mm)	主要尺寸 Main dimensions			法兰尺寸和螺栓规格Flange dimensions and bolt specifications							
				1.0MPa				1.6MPa			
	L	H1	H	D	D1	D2	n-Φd	D	D1	D2	n-Φd
50	108	265	350	160	125	100	4-18	165	125	99	4-18
65	112	275	365	180	145	120	4-18	185	145	118	4-18
80	114	280	380	195	160	135	4-18	200	160	132	8-18
100	127	300	425	215	180	155	8-18	220	180	156	8-18
125	140	315	450	245	210	185	8-18	250	210	184	8-18
150	140	325	470	280	240	210	8-23	285	240	244	8-22
200	152	395	595	335	295	265	8-23	340	295	266	12-22
250	165	420	620	390	350	320	12-23	405	355	319	12-26
300	178	500	750	440	400	368	12-23	460	410	370	12-26
350	190	530	800	500	460	428	16-23	520	470	429	16-26
400	216	570	870	565	515	482	16-25	580	525	480	16-30
450	222	600	920	615	565	532	20-25	640	585	548	20-30
500	229	680	1040	670	620	585	20-25	715	650	609	20-33
600	267	750	1170	780	725	685	20-30	840	770	720	20-36
700	292	810	1290	895	840	800	24-30	910	840	794	24-36
800	318	905	1440	1010	950	905	24-34	1025	950	901	24-39
900	330	960	1550	1110	1050	1005	28-34	1125	1050	1001	28-39
1000	410	1010	1650	1220	1160	1115	28-34	1255	1170	1112	28-42

注：可根据ANSI、JIS、DIN标准及非标尺寸生产。
Note: according to ANSI, JIS, DIN standards and production of non-standard size.

DYVA 东盐阀门 DONGYAN VALVE 国阀品质 东盐匠心
法兰式双偏心四氟骨架密封蝶阀
Flange double eccentric butterfly valve PTFE seal skeleton

D$^{3}_{6}$43F-$^{25}_{40}$C、P、R

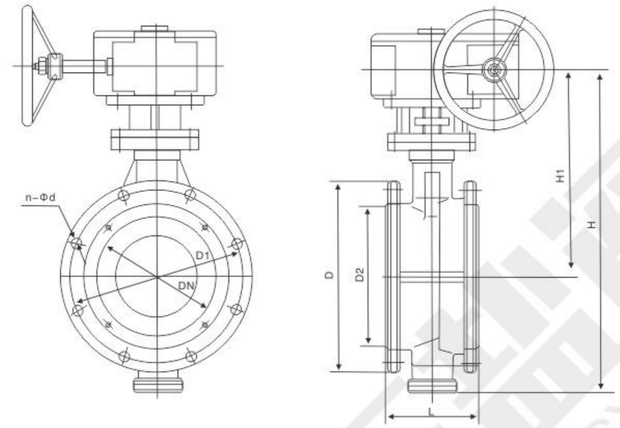

主要连接尺寸 Main connection dimensions

公称通径 DN(mm)	主要尺寸 Main dimensions			法兰尺寸和螺栓规格Flange dimensions and bolt specifications							
				2.5MPa				4.0MPa			
	L	H1	H	D	D1	D2	n-Φd	D	D1	D2	n-Φd
50	108	265	350	165	125	99	4-18	165	125	99	4-18
65	112	275	365	185	145	118	8-18	185	145	118	8-18
80	114	280	380	200	160	132	8-18	200	160	132	8-18
100	127	300	425	235	190	156	8-22	235	190	156	8-22
125	140	315	450	270	220	184	8-26	270	220	184	8-26
150	140	325	470	300	250	211	8-26	300	250	211	8-26
200	152	395	595	360	310	274	8-23	375	320	284	12-30
250	165	420	620	425	370	330	12-26	450	385	345	12-33
300	178	500	750	485	430	389	12-30	515	450	409	16-33
350	190	530	800	555	490	448	16-30	580	510	465	16-36
400	216	570	870	620	550	503	16-33	660	585	535	16-39
450	222	600	920	670	600	548	16-36	685	610	560	20-39
500	229	680	1040	730	660	609	20-36	755	670	615	20-42
600	267	750	1170	845	770	720	20-36	890	795	735	20-48
700	292	810	1290	960	875	820	20-39				
800	318	905	1440	1085	990	928	24-42				
900	330	960	1550	1185	1090	1028	24-48				
1000	410	1010	1650	1320	1210	1140	28-48				

注：可根据ANSI、JIS、DIN标准及非标尺寸生产。
Note: according to ANSI, JIS, DIN standards and production of non-standard size.

用途

本系列蝶阀采用偏心结构设计，其阀门主要结构由阀体、蝶板、阀座、阀杆及传动机构等部件组成，阀座采用可脱卸构造，并或根据不同介质的物理化学介质特性，选用相应的耐腐蚀、耐光、耐老化材质，可广泛应用于给排水、空调、石油、化工、食品、医药、能源系统等流体管线上作为调节和截流装置使用。

Uses

This series of butterfly valve eccentric structure design, its main structure of the valve from the valve body, butterfly plates, valve seat, stem, and transmission parts such as the composition, valve seat with detachable construction, and media or under different physical and chemical characteristics of medium , choose the appropriate anti-corrosion, light, anti-aging material can be widely used in water supply and drainage, air conditioning, petroleum, chemical, food, medicine, energy systems, fluid lines, as a regulator and the closure device.

产品特点

1、阀座采用与阀体整体硫化，一体性好，便于现场维修，并采用全流量设计，不受杂质卡阻影响，两端的联体环型密封线使管道安装无须附加垫片而保持可靠密封，并可根据不同使用要求选用不同材质。

2、结构简单，开启迅速 。蝶板材料采用流线型设计，可双向使用，流阻小，流量特性优异。

3、寿命长，启闭次数多。

4、双向密封，试验泄漏为零。

5、流量特性趋于直线，调节性能好。

Features

1.Valve seat and valve body as a whole using sulfide, one good, easy on-site maintenance, and use full-flow design, free from impurities card blocking effects of both ends of the conjoined ring seal line to make the pipe installation without additional pads while maintaining a reliable seal, according to different application requirements and can choose different materials.
2.Simple structure, to open quickly. Butterfly board material with streamlined design, can be bi-directional use, flow resistance is small, excellent flow characteristics.
3.Long life, open and close more times.
4.Two-way seal, zero leakage test.
5.Flow characteristics tend to a straight line to regulate the performance is good.

采用标准 Adoption Standard

制造标准 Manufacturing Standards	GB 12238-89	法兰标准Flange Standard	GB/T 17241.6 GB/T9113.1
结构长度标准 Structure of the length of the standard	GB 12221-89	检验标准Test Standard	GB/T 13927-92

主要性能规范 Main Performance Specifications

型号Model	公称压力 PN(MPa)	壳体试验压力 Shell test pressure PS(MPa)	密封试验压力 Sealing test pressure (Mpa)	工作温度Work Temperature（℃）	适用介质 Applicable medium
D$^{3}_{6}$$^{1}_{9}$71X-6	0.6	0.9	0.66	≤150℃	水、油品 Water, oil
D$^{3}_{6}$$^{1}_{9}$71X-10	1.0	1.5	1.1		
D$^{3}_{6}$$^{1}_{9}$71X-16	1.6	2.4	1.76		

主要零件材料 Main parts and materials

零件名称Part Name	阀体、蝶板 Valve body, butterfly plate	阀杆Stem	密封圈Seal ring	填料Packing
材料Material	灰铸铁Gray Iron 球墨铸铁Ductile Iron 铸钢Cast steel 不锈钢Stainless steel	中碳钢 不锈钢（2Cr13） 1Cr18Ni9Ti Medium carbon steel Stainless steel （2Cr13）1Cr18Ni9Ti	天然胶NR 丁晴橡胶NBR 乙丙橡胶EPDM 聚四氟乙烯PTFE 氟橡胶Viton	柔性石墨Flexible Graphite

DYVA 东盐阀门 DONGYAN VALVE
国阀品质 东盐匠心
中线对夹式软密封蝶阀
Midline wafer type soft sealing butterfly valve

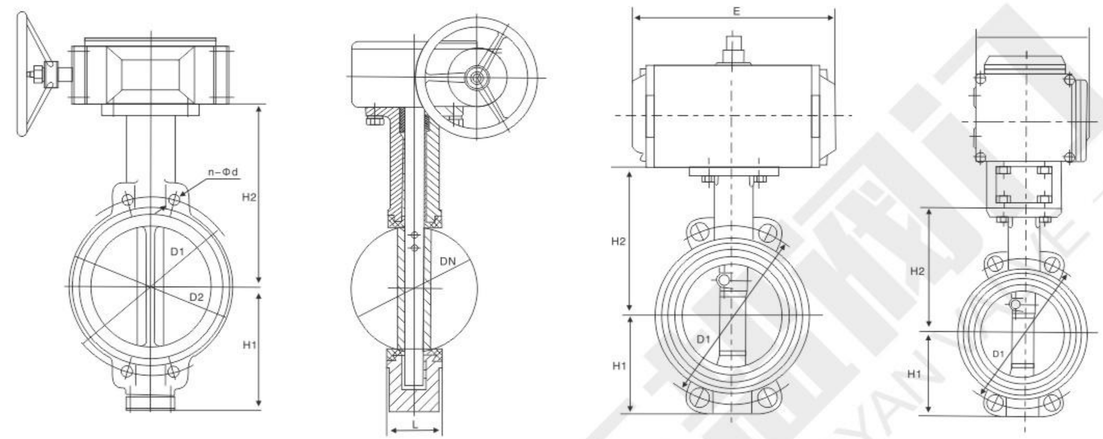

主要连接尺寸Main connection dimensions

公称通径 DN(mm)	主要尺寸Main dimensions					法兰尺寸和螺栓规格Flange dimensions and bolt specifications					
						0.6MPa		1.0MPa		1.6MPa	
	L	H1	H2	E	F	D1	n-Φ	D1	n-Φ	D1	n-Φ
50	43	80	160	137	109	110	4-Φ14	120	4-Φ19	125	4-Φ19
65	46	88	175	204	109	130	4-Φ14	136	4-Φ19	145	4-Φ19
80	46	96	180	204	109	150	4-Φ19	160	4-Φ19	160	4-Φ19
100	52	115	200	230	135	170	4-Φ19	185	4-Φ19	180	4-Φ19
125	56	128	213	271	135	200	4-Φ19	215	4-Φ19	210	4-Φ19
150	56	140	225	305	153	225	4-Φ19	238	4-Φ23	240	4-Φ23
200	60	175	260	380	218	280	4-Φ19	295	4-Φ23	295	4-Φ23
250	68	202	290	462	218	335	4-Φ19	357	4-Φ23	355	4-Φ28
300	78	242	330	555	218	395	4-Φ23	407	4-Φ23	410	4-Φ28
350	78	266	360			445	4-Φ23	467	4-Φ23	470	4-Φ28
400	102	298	390			495	4-Φ23	515	4-Φ28	525	4-Φ31
450	114	315	410			550	4-Φ23	565	4-Φ28	585	4-Φ31
500	127	348	430			600	4-Φ23	620	4-Φ24	650	4-Φ30
600	154	400	490			705	4-Φ26	725	4-Φ27	770	4-Φ33
700	165	520	550			810	4-Φ26	840	4-Φ27	840	4-Φ33
800	190	591	610			920	4-Φ31	950	4-Φ30	950	4-Φ36
900	203	660	680			1020	4-M27	1050	4-M30	1050	4-M36
1000	216	670	730			1120	4-M27	1160	4-M33	1170	4-M39
1200	254	780	835			1340	4-M30	1380	4-M36	1390	4-M45
1400	279	890	935			1560	4-M33	1590	4-M39	1590	4-M45
1600	318	1000	1035			1760	4-M33	1820	4-M45	1820	4-M52

注：可根据ANSI、JIS、DIN标准及非标尺寸生产，表中所列的螺栓孔径是铸铁法兰的孔径。
Note: according to ANSI, JIS, DIN standard and non-standard size of the production, listed in the table is a cast iron flange bolt hole diameter.

阀板分析 Disc Analysis

蝶阀 Butterfly valve							
与介质接触 medium	材料名称 Material	适应尺寸 Appliale diamension	PT值 value	氯含量(ppm) chlorinity content	适用温度(℃) Applicable temperature	材质优点 Material merits	应用介质 Application medium
蝶板 Butterfly plate	SAF2507 超级双项钢 Super double steel、表面质量 Surface quality S3	DN40~1200	≥3.0	<30.000	≤35~150℃	特耐磨、耐腐蚀、宜高流速冲击 wear-resisting, anti-corrosive, support high-velocity impact-resisting	石灰石浆液、石膏浆液，洗涤浆液，Gipsum浆液、工艺水、废水等。limestone serosity, gypsum serosity, washing serosity, gipsum serosity, process water, waste water
	DIN1.4529 超级双项不锈钢 Super double of stainless steel	DN40~1200	≥5.0	<50.000	≤35~150℃		
	C276耐腐蚀镍基硬合金表面质量S3 C276 nickel-based corrosion resistance Hard alloy surface quality S3	DN40~1200	≥2.5	<50.000	≤35~150℃		
	Hostalen Gur						
	CF8M超低碳不锈钢 Ultra-low carbon stainless steel	DN40~1200	≥5.0	<5.000	≤35~150℃	耐腐蚀 Anti-corrosive	工艺水、废水等 Process water, waste water etc

阀座分析 Seat Analysis

阀座(阀衬) Seat	CSM弹性胶 CSM elastic rubber	DN40~1200	≥0	<150.000	≤35~150℃	耐磨、耐腐蚀 Wear-resisting, anti-corrosive	石灰石浆流，石膏浆液，洗涤浆液，Gipsum浆液、工艺水、废水等。limestone serosity,gypsum serosity,washing serosity, gipsum serosity,process water,waste water
	EPDN 克三元乙丙橡胶 EPDN g epdm	DN40~1200	≥2.5	<150.000	≤35~150℃	宜高流速冲击 support high-velocity impact-resisting	

主要零部件材质 Main parts and materials

阀体 Body		阀板 Disc		转轴 Shaft	衬套 Bush	阀座 Seat		
材料名称 Material	代号 code	材料名称 Material	代号 code	材料名称 Material	材料名称 Material	材料名称 Material	代号 code	适用于温度(℃) Applicable temperature
灰铸铁 Grey iron	Z	电镀球黑铸铁 Electroplated ductile iron	B1	不锈钢 Stainless steel	润滑青铜 Lubrication bronze	天然胶 NR	X1	-20~+85
球墨铸铁 Nodular iron	Q	铝青铜 Aluminum bronze	B2	碳钢 Carbon steel	聚四氟乙烯 PTFE	海帕伦 Hypalan	X2	-18~+135 短时short-term -18~+149
名铝青铜 Aluminum bronze	T	ZG1Cr18Ni9Ti 不锈钢Stainless steel	B3			乙丙橡胶 EPOM	X3	-45~+135 短时short-term -50~+149
ZG1Cr18Ni9Ti 不锈钢Stainless steel	P	钛钢 Titanium steel	B4			氯乙橡胶 Chloroacetyl rubber	X4	-7~+93 短时short-term -7~+107
CF8M不锈钢 CF8M stainless steel	R	CF8M不锈钢 CF8M stainless steel	B5			丁腈橡胶 NBR	X5	-12~+82 短时short-term -12~+93
碳钢 Carbon steel	C	碳钢 Carbon steel	B6			耐磨橡胶 WR	X6	-10~+50
		CF8M不锈钢 CF8M stainless steel	B7			氟橡胶 Vitom	X7	-23~+150
						耐热乙丙橡胶 Heat-resistant EPDM	X9	-20~+150
						聚四氟乙烯 PTFE	F4	+10~+150

电厂脱硫蝶阀专用阀板 Power Station Desulfurizatiom disc

哈氏合金C276、DIN1.4529、1.4469、1.4462、1.4401、1.4410、1.4408/SAF2507、蒙乃尔、904L 、255合金等。
Hastelloy C276 alloy, DIN1.4529、1.4469、 1.4462、 1.4401、 1.4410、 1.4408 / SAF2507、 monel、 904 L、 255 alloy etc.

主要性能规范 Main Performance Specifications

适用温度 Applicable temperature	应用介质 Application medium
天然胶≤85℃ NR	石膏浆液、石灰石浆液、回收水、工艺水、废水 gypsum serosity,limestone serosity, recycle-water,process water, waste water
三元乙丙胶≤100℃ EPOM	

主要零件材料 Main Parts and Materials

名称 Name	材料 Material
阀体 Body	灰铸铁、球墨铸铁、碳钢 Gray Iron, Ductile Iron,Carbon steel
蝶板 Butterfly plate	碳钢包覆橡胶、碳钢包覆氟塑料、不锈钢 双相不锈钢板1.4529、C276 Rubber coated carbon steel, fluorplastic coated carbon steel,stainless seel, Duplex stainless steel 1.4529、C276
阀座 Seat	天然橡胶NR、三元乙丙胶 EPOM
阀杆 Stem	不锈钢 Stainless steel、2Cr13、304

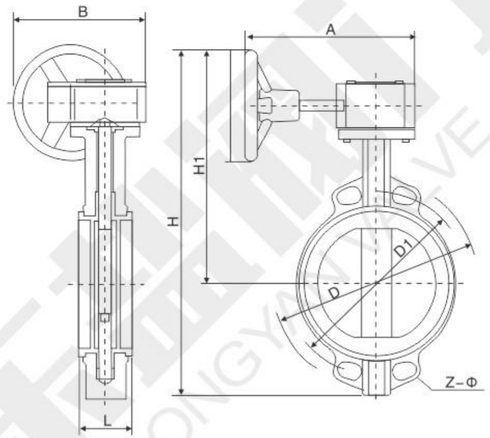

主要外形尺寸和连接尺寸Main External Dimensions and Connection Size(mm)

公称通径(DN)	L	D	D1	Z-Φ	H	H1	A	B	Do	重量(kg)Weight
40	33	150	110	4-18	350	270	193	125	150	7
50	43	165	125	4-18	360	280	193	125	150	8
65	46	185	145	4-18	385	295	193	125	150	9
80	46	200	160	8-18	396	300	193	125	150	10
100	52	220	180	8-18	430	315	193	125	150	11
125	56	250	210	8-18	460	335	193	125	150	13
150	56	285	240	8-22	485	345	193	125	150	14
200	60	340	295	8-22	630	455	283	165	220	30
250	68	395	350	12-22	690	484	283	165	220	40
300	78	445	400	12-22	770	530	334	175	280	78
350	78	505	460	16-22	830	560	334	175	280	81
400	102	565	515	16-26	910	595	425	210	320	140
450	114	615	565	20-26	938	618	425	210	320	160
500	127	670	620	20-26	993	650	425	210	320	190
600	154	780	725	20-30	1131	718	425	210	320	315
700	165	895	840	24-30	1476	998	620	320	400	480
800	190	1015	950	24-33	1533	1008	620	320	400	516
900	203	1115	1050	28-33	1655	1070	620	320	400	780
1000	216	1230	1160	28-36	1765	1125	620	400	400	950
1100	230	1340	1270	32-36	1880	1184	620	400	400	1050
1200	254	1455	1380	32-39	1995	1240	620	400	400	1150
采用标准 Standard	设计制造Design：GB12238 结构长度Structural legth：GB12221 法兰Flange：GB/T17241.6 PN1.0MPa									

法兰式(衬胶)脱硫蝶阀
Flange (rubber lining) desulfurization butterfly valve

主要性能规范 Main Performance Specifications

适用温度 Applicable temperature	应用介质 Application medium
天然胶≤85℃ NR	石膏浆液、石灰石浆液、回收水、工艺水、废水 gypsum serosity,limestone serosity, recycle-water,process water, waste water
三元乙丙胶≤100℃ EPOM	

主要零件材料 Main Parts and Materials

名称 Name	材料 Material
阀体 Body	灰铸铁、球墨铸铁、碳钢 Gray Iron, Ductile Iron,Carbon steel
蝶板 Butterfly plate	碳钢包覆橡胶、碳钢包覆氟塑料、不锈钢 双相不锈钢板1.4529、C276 Rubber coated carbon steel, fluorplastic coated carbon steel,stainless seel, Duplex stainless steel 1.4529、C276
阀座 Seat	天然橡胶NR、三元乙丙胶 EPOM
阀杆 Stem	不锈钢 Stainless steel、2Cr13、304

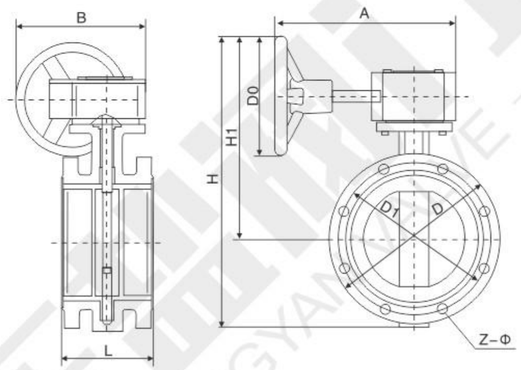

主要外形尺寸和连接尺寸Main External Dimensions and Connection Size(mm)

公称通径 (DN)	公称压力 (PN)MPa	L	D	D1	Z-Φ	H	H1	A	B	Do	重量(kg)
50		108	165	125	4-18	310	227	193	125	150	8
65		112	185	145	4-18	333	240	193	125	150	11.5
80		114	200	160	8-18	423	323	193	125	150	12.5
100		127	220	180	8-18	440	330	193	125	150	23
125		140	250	210	8-18	455	330	193	125	150	41
150		140	285	240	8-22	510	368	193	125	150	47
200		152	340	295	8-22	614	444	283	165	220	61
250		165	395	350	12-22	680	483	283	165	220	74
300		178	445	400	12-22	776	554	334	175	280	103
350	1.0	190	505	460	16-22	840	588	334	175	280	120
400		216	565	515	16-26	858	596	425	210	320	217
450		222	615	565	20-26	993	686	425	210	320	242
500		229	670	620	20-26	1056	721	425	210	320	279
600		267	780	725	20-30	1161	771	425	210	320	396
700		229	860	810	24-26	1350	818	503	393	450	265
700		292	895	840	24-30	1350	818	503	393	450	424
800		241	975	920	24-30	1440	858	503	393	450	345
800		318	1015	950	24-33	1440	858	503	393	450	552
900		241	1075	1020	24-30	1616	978	630	555	500	425
900	0.6	330	1115	1050	28-33	1616	978	630	555	500	680
1000	1.0	300	1175	1120	28-30	1780	1058	630	555	500	565
1000	0.6	410	1230	1160	28-36	1780	1058	630	555	500	906
1100	1.0	350	1305	1240	28-33	1995	1200	630	555	500	740
1100	0.6	440	1340	1270	32-36	1995	1200	630	555	500	1184
1200	1.0	350	1405	1340	32-33	2045	1250	630	555	500	910
1200	0.6	470	1455	1380	32-36	2045	1250	630	555	500	1456
采用标准 Standard	1.0	设计制造Design：GB12238		结构长度Structural legth：GB12221		法兰Flange：GB/T17241.6					PN1.0MPa

法兰式双偏心软密封蝶阀
Soft sealing flange double eccentric butterfly valve

用途

本蝶阀适于治金、化工电力和市政工程及水厂等介质为水、油品和空气管道上，起切断流体和调节介质流量等作用。

Use

This valve is suitable for metallurgy, chemical engineering and electrical and municipal waterworks, and other media for water, oil and air pipes, cut off from the flow of fluid medium such as the role and regulation.

特点

1、本蝶阀设计结构新颖，整体尺寸小，重量轻。
2、蝶板采用双偏心，启动迅速，操作轻更省力。
3、蝶板采用双偏心，使蝶板与密封圈间无滑动摩擦，密封面耐磨损使用寿命长，密封可靠，易调整。

Features

1、This valve design of novel structure, the overall small size, light weight
2、Double eccentric butterfly plate, start quickly, the operation is more labor-saving light.
3、Double eccentric butterfly plate, so that seal between the butterfly plate and no sliding friction, wear resistance and long service life sealing surface sealing, reliable, easy to adjust.

工作原理

旋转蝶阀手轮，通过蜗杆蜗轮传动，带动阀杆蝶板在90度范围内自由旋转，使蝶阀处于开启或关闭状态，达到通或切断介质的目的。

Work

Rotary valve hand wheel, through the worm gear transmission, the stem disc drive within the 90-degree rotation, so that valve is opened or closed state, to achieve the purpose of communication or cut off the media.

采用标准Standard

制造标准 Manufacturing standards	GB 12238-89	法兰标准Flange standard	GB/T 17241.6 GB/T 9113.1
结构长度标准 Structure of the length of the standard	GB 12221-89	检验标准Test standard	GB/T 13927-92

主要性能规范Main Performance Specifications

型号Model	公称压力 PN(MPa)	壳体试验压力 PS(MPa)	密封试验压力 PS(MPa)	工作温度 Work temperature (℃)	适用介质 Applicable medium
D$^{3}_{6}$$^{}_{9}$41X-6	0.6	0.9	0.66	≤80℃	水、油品 Water, oil
D$^{3}_{6}$$^{}_{9}$41X-10	1.0	1.5	1.1	≤80℃	水、油品 Water, oil

主要零件材料Main parts and materials

零件名称Part name	阀体、蝶板 Valve body, butterfly plate	阀杆Stem	阀座Seat	密封圈Ring	填料Packing
材料Material	灰铸铁 Grey cast iron 球墨铸铁 Ductile iron 铸钢 Cast steel 不锈钢 Stainless steel 镍铬铸铁 Nickel-chromium cast iron	中碳钢 Medium carbon steel 不锈钢 Stainless steel（2Cr13） 1Cr18Ni9Ti	铜合金、不锈钢 Copper alloy, stainless steel	丁晴橡胶NBR 乙丙橡胶EPDM 聚四氟乙烯PTFE 氟橡胶Viton	柔性石墨 Flexible graphite

法兰式双偏心软密封蝶阀

Soft sealing flange double eccentric butterfly valve

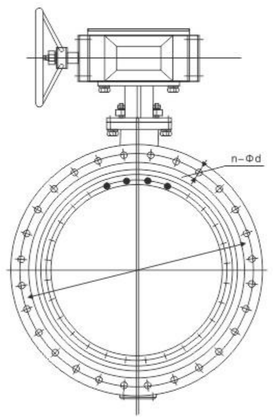

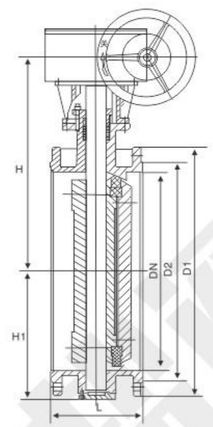

主要连接尺寸Main connection dimensions

公称通径 DN(mm)	L 短系列 Short Series	L 长系列 Long series	H1	H2	0.6MPa D	0.6MPa D1	0.6MPa D2	0.6MPa n-d	1.0MPa D	1.0MPa D1	1.0MPa D2	1.0MPa n-d
100	127	127	120	240	210	170	144	4-19	220	180	144	8-19
125	140	140	130	270	240	200	174	8-19	250	210	174	8-19
150	140	140	150	300	265	225	199	8-19	285	240	199	8-23
200	152	152	180	330	320	280	254	8-19	340	295	254	8-23
250	165	250	220	400	375	335	309	12-19	395	350	309	12-23
300	178	270	220	410	440	395	363	12-23	445	400	363	12-23
350	190	290	270	460	490	445	413	12-23	505	460	413	16-23
400	216	310	290	510	540	495	463	16-23	565	515	463	16-28
450	222	330	320	560	595	550	518	16-23	615	565	518	20-28
500	229	350	360	590	645	600	568	20-23	670	620	568	20-28
600	267	390	390	660	755	705	887	20-26	780	725	667	20-31
700	292	430	460	780	860	810	772	24-26	895	840	772	24-31
800	318	470	530	850	975	920	878	23-31	1015	950	878	24-34
900	330	510	570	920	1075	1020	978	24-31	1115	1050	978	28-34
1000	410	550	630	990	1175	1120	1078	28-31	1230	1160	1078	28-37
1200	470	630	750	1115	1405	1340	1295	32-34	1455	1380	1295	32-40
1400	530	710	850	1228	1630	1560	1510	36-37	1675	1590	1510	36-43
1600	600	790	990	1340	1830	1760	1710	40-37	1915	1820	1710	40-49
1800	670	870	1100	1570	2045	1970	1918	44-40	2115	2020	1920	44-49
2000	760	950	1210	1680	2265	2180	2125	48-43	2325	2230	2130	48-49
2200	590	/	1340	1850	2475	2390	2335	52-43	2550	2440	2330	52-56
2400	650	/	1460	1970	2685	2600	2545	56-43	2760	2650	2530	56-56
2600	700	/	1560	2120	2905	2810	2750	60-49	2960	2850	2740	60-56
2800	760	/	1680	2240	3115	3020	2960	64-49	3180	3070	2940	64-56
3000	810	/	1800	2360	3315	3220	3160	68-49	3405	3290	3150	68-62
3200	880	/	1920	2500	3525	3430	3370	72-49	3630	3510	3360	72-62
3400	950	/	2040	2620	3735	3640	3580	76-49	3850	3730	3570	76-62

KD741X-V自动保压液控蝶阀

KD741X-V Automatic packing hydraulic control butterfly valve

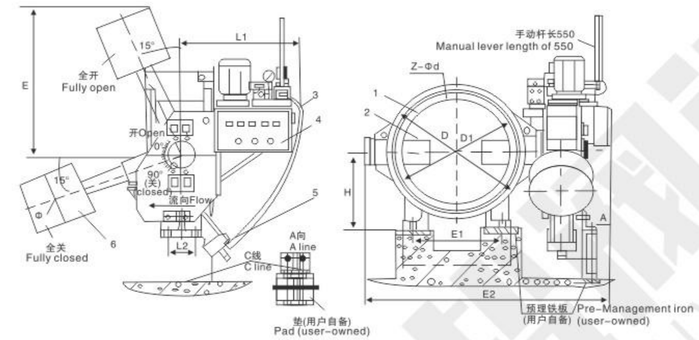

1、阀体 2、蝶板 3、液控系统 4、电控箱 5、摆动油缸 6、重锤
1、Body 2、disc 3、hydraulic control system 4、electric control box 5、swing cylinder 6、 hammer

正装型Dress Type

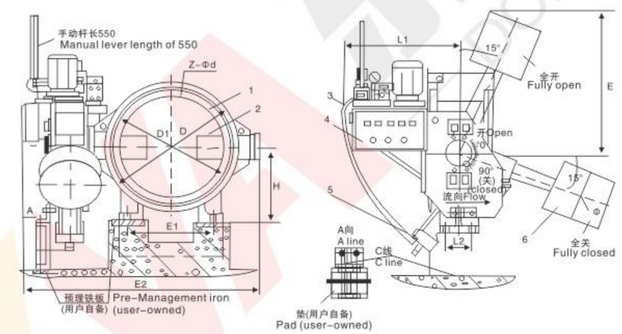

1、阀体 2、蝶板 3、液控系统 4、电控箱 5、摆动油缸 6、重锤
1、Body 2、disc 3、hydraulic control system 4、electric control box 5、 swing cylinder 6、 hammer

反装型Anti-mounted type

用途及特点

本蝶阀是在引进国外产品的基础上在性能上经过改进和完善的产品。它能按预定程序实现泵阀联动；开启和关闭远距离自动控制、自动保压不掉锤，蝶板不抖动，流阻小；具有可调快、慢关两个阶段，特别是当突然停电或事故停泵时，永存的重锤势能，将自动按预先调节的快慢关两个阶段关阀，防止水锤危害，保护水泵及管网系统安全。

本阀广泛用于水厂、电厂、冶金、排灌等大中型工程管道泵站。

Uses and Features

The butterfly is the introduction of foreign products on the basis of improved performance and improved products. It can achieve the scheduled procedure valve linkage; open and close remote control, automatic packing can not afford to hammer, the disc does not jitter, small resistance; with adjustable speed, slow off the two phases, especially when a sudden power failure or accident when the pump stops, the heavy hammer of eternal potential, will automatically adjust the speed of the relevant pre-closing valve in two stages, to prevent water hammer damage, protect the water pump pipe network system security.

The valves are widely used in water plants, power plants, metallurgy, irrigation and drainage pumping stations and other large and medium projects in the pipeline.

采用标准

法兰连接尺寸：灰铸铁法兰GB/T 17241.6-1998
球墨铸铁法兰GB/T17241.6-1998
钢制法兰GB/T 9113.1
结构长度：GB 12221-89
压力试验：GB/T 13927-92

Standard

Flange Size: Gray cast iron flange GB / T 17241.6-1998
Ductile iron flange GB/T17241.6-1998
Steel flange GB / T 9113.1
Structure Length: GB 12221-89
Pressure Test: GB / T 13927-92

主要零件材料Main components material

名称Name	材料material
阀体Body	灰铸铁、球墨铸铁、碳素钢 Gray iron, ductile iron, carbon steel
蝶板Disc	灰铸铁、球墨铸铁、碳素钢 Gray iron, ductile iron, carbon steel
阀轴Valve shaft	碳素钢（表面防腐处理）、不锈钢 Carbon steel (surface anti-corrosion treatment), stainless steel
阀体密封圈Body Seal	不锈钢、铜合金 Stainless steel, copper alloy
蝶板密封圈Disc ring	优质橡胶 Quality rubber

主要技术参数Main technical parameters

公称通径DN(mm)	公称压力PN（MPa）	试验压力 Test pressure（MPa）		适用温度 Applicable temperature（℃）	适用介质 Applicable medium
		壳体Case	密封Seal		
300-1000	2.5	3.75	2.75	≤80℃	水、海水、泥沙等 Water, sea water, sediment, etc.
300-1800	1.6	2.4	1.76		
300-2000	1.0	1.5	1.1		
1200-2400	0.6	0.9	0.66		
2000-3400	0.25	0.375	0.275		

DYVA 东盐阀门 DONGYAN VALVE 国阀品质 东盐匠心
KD741X-V自动保压液控蝶阀
KD741X-V Automatic packing hydraulic control butterfly valve

主要外形尺寸Main external dimensions

公称通径 DN(mm)	0.25MPa										
	D	D1	L1	L2	E	E1	E2	H	Z-Φd	电机功率 Motor Power（KW）	地脚螺栓Foot Bolt 4-Md
2000	2190	2130	1130	360	1882	1370	3630	1165	48-30	5.5	4-36
2200	2405	2340	930	400	1960	1560	3955	1240	52-33	5.5	4-39
2400	2605	2540	930	450	2060	1760	4155	1340	56-33	7.5	4-39
2600	2805	2740	1000	500	2160	1960	4355	1540	60-33	7.5	4-39
2800	3030	2960	1000	550	2260	2160	4555	1640	64-36	7.5	4-39
3000	3230	3160	1000	600	2360	2360	4755	1140	68-36	7.5	4-42
3200	3430	3360	1000	650	2460	2580	7955	1840	72-36	7.5	4-42
3400	3630	3560	1000	700	2560	2760	5155	1940	76-36	7.5	4-42

公称通径 DN(mm)	0.6MPa										
	D	D1	L1	L2	E	E1	E2	H	Z-Φd	电机功率 Motor Power（KW）	地脚螺栓Foot Bolt 4-Md
1200	1405	1340	970	260	1450	790	2600	710	32-33	5.5	4-36
1300	1520	1450	1010	260	1450	820	2740	780	32-36	5.5	4-36
1400	1630	1560	1010	260	1450	840	2800	835	32-36	5.5	4-36
1500	1730	1660	1050	260	1450	900	300	900	36-36	5.5	4-36
1600	1830	1760	1050	260	1450	960	3140	935	40-36	5.5	4-36
1800	2045	1970	1090	270	1890	1370	3500	1040	44-39	5.5	4-39
2000	2265	2180	1160	360	1890	1370	3750	1130	48-42	7.5	4-42
2200	2475	2390	/	/	/	/	/	/	52-42	/	4-42
2400	2685	2600	/	/	/	/	/	/	56-42	/	4-42

公称通径 DN(mm)	1.0MPa										
	D	D1	L1	L2	E	E1	E2	H	Z-Φd	电机功率 Motor Power（KW）	地脚螺栓Foot Bolt 4-Md
300	445	400	710	100	910	320	549	330	12-22	2.2	4-22
350	505	460	720	120	910	320	574	330	16-22	2.2	4-22
400	565	515	730	120	910	420	607	370	16-26	2.2	4-22
500	670	620	820	140	1135	600	758	440	20-26	2.2	4-27
600	780	725	850	150	1230	430	857	460	20-30	2.2	4-30
700	895	840	870	180	1230	570	920	540	24-30	2.2	4-30
800	1015	950	890	180	1230	610	988	530	24-33	2.2	4-30
900	1115	1050	910	180	1280	700	1354	585	28-33	5.5	4-30
1000	1230	1160	920	200	1450	740	1464	620	28-36	5.5	4-30
1200	1455	1380	970	260	1450	790	/	710	32-39	5.5	4-36
1300	1575	1490	1010	260	1730	820	1493	800	32-42	5.5	4-36
1400	1675	1590	1010	260	1885	840	/	865	36-42	5.5	4-36
1500	1785	1700	1080	260	1885	900	1857	925	36-42	5.5	4-36
1600	1915	1820	1080	270	1890	960	1995	980	40-48	7.5	4-45
1800	2115	2020	1120	440	1890	1370	/	1110	44-48	7.5	4-45
2000	2325	2230	1160	460	/	1400	/	/	48-48	/	4-45

主要外形尺寸Main external dimensions

公称通径 DN(mm)	1.6MPa										
	D	D1	L1	L2	E	E1	E2	H	Z-Φd	电机功率 Motor Power (KW)	地脚螺栓Foot Bolt 4-Md
300	460	410	710	100	910	384	1040	330	12-36	2.2	4-22
350	520	470	720	100	910	384	1100	345	16-26	2.2	4-22
400	580	525	730	120	1010	484	1160	370	16-30	2.2	4-22
500	715	650	820	140	1230	670	1530	440	20-33	2.2	4-27
600	840	720	850	150	1240	690	1680	490	20-36	5.5	4-30
700	910	840	870	180	1240	690	1750	520	24-36	5.5	4-30
800	1025	950	890	180	1450	75	2150	550	24-39	5.5	4-36
900	1125	1050	910	180	1450	800	2250	600	28-39	5.5	4-30
1000	1255	1170	920	200	1450	830	2470	640	28-42	5.5	4-30
1200	1485	1390	970	260	1450	945	2660	760	32-48	5.5	4-42
1300	1585	1490	1010	360	1450	980	2750	845	32-48	5.5	4-48
1400	1685	1590	1010	360	1450	980	2870	890	36-48	5.5	4-48
1500	1820	1710	1080	360	1890	1370	3140	945	36-56	7.5	4-48
1600	1930	1820	/	/	/	/	/	/	50-56	/	/
1800	2130	2020	/	/	/	/	/	/	44-56	/	/

公称通径 DN(mm)	2.5MPa										
	D	D1	L1	L2	E	E1	E2	H	Z-Φd	电机功率 Motor Power (KW)	地脚螺栓Foot Bolt 4-Md
300	485	430	790	100	590	320	1085	330	16-30	2.2	4-22
350	555	490	800	120	1020	320	1150	360	16-33	2.2	4-30
400	620	550	820	120	1020	420	1345	360	16-36	2.2	4-30
500	730	660	840	140	1230	600	1590	430	20-36	5.5	4-30
600	845	770	860	150	1230	430	1700	490	20-39	5.5	4-30
700	960	875	880	180	1450	570	1780	520	24-42	7.5	4-36
800	1085	990	900	180	1450	650	1525	550	24-48	7.5	4-36
900	1185	1090	820	/	/	/	/	/	28-48	/	/
1000	1320	1210	820	/	/	/	/	/	28-56	/	/

用途及特点

伸缩阀适用于温度≤425℃,公称压力≤1.6MPa的食品、医药、化工、石油、电力、轻纺、造纸等给排水、气体管道上作调节流量和截流介质的作用，具有补偿管道热胀冷缩的功能。

其主要特点为：

1、设计新颖、合理、结构独特，重量轻，操作方便，启闭迅速；

2、伸缩蝶阀除了能作调节和截流作用，补偿管道温差所产生的热胀冷缩功能外，还能为安装更换、维修阀门提供方便；

3、密封部位可调节更换，密封性能可靠等特点。

Uses and Features

Telescopic valves for temperature ≤ 425 ℃, nominal pressure ≤ 1.6MPa of food, medicine, chemical, petroleum, electric power, textile, paper and other water supply and drainage, gas pipelines to make adjustments on the role of flow and closure of media and has compensation for piping hot Expansion shrinkage function.

Its main features are:

1、novel design, reasonable, unique structure, light weight, easy to operate, open and close quickly;

2、flexible butterfly valve to make adjustments and the closure addition to the role of compensation arising from thermal expansion and contraction pipe temperature functions, but also for the installation of replacement valves to facilitate maintenance;

3、 sealing parts can be adjusted replacement, sealing performance and reliable and so on.

采用标准

设计标准：GB/T 12238-1989
法兰连接尺寸：GB/T 9113.1; GB 12741.6
压力试验：GB/T 13927-1992; JB/T 9092-1999

Using standard

Design Standards：GB/T 12238-1989
Flange connection dimensions：GB/T 9113.1; GB 12741.6
Pressure test：GB/T 13927-1992; JB/T 9092-1999

主要性能规范Main Performance Specifications

公称通径DN	DN(mm)	50~2000		
公称压力PN	PN(MPa)	0.6	1.0	1.6
试验压力 Test pressure	强度试验Strength test	0.9	1.5	2.4
	密封试验Seal test	0.66	1.1	1.76
	气密封试验Gas seal test	0.8	0.6	0.6
适用温度Suitable temperature	金属密封Metal seal≤425℃		橡胶密封Rubber seal≤80℃	
适用介质Applicable medium	空气、水、蒸气、油品、腐蚀性介质 Air, water, steam, oil, corrosive media		空气、水、蒸气、煤气、油品 Air, water, steam, gas, oil	
驱动形式Drive Type	手动、蜗轮传动、气动、电动 Manual, worm gear drive, pneumatic, electric			

主要零件材料Main parts and materials

零件名称Part Name	材料Material
阀体Body	镍铬铸铁、球墨铸铁、铸铁、碳钢、不锈钢 Nickel-chromium cast iron, ductile iron, cast iron, carbon steel, stainless steel
蝶板Butterfly Plate	镍铬铸铁、球墨铸铁、碳钢、合金钢、不锈钢 Nickel-chromium cast iron, ductile iron, carbon steel, alloy steel, stainless steel
密封圈Ring	橡胶、聚四氟、不锈钢 Rubber, PTFE, stainless steel
阀杆Stem	2Cr13、不锈钢 2Cr13, stainless steel
伸缩管Bellows	镍铬铸铁、球墨铸铁、铸铁、碳钢、不锈钢 Nickel-chromium cast iron, ductile iron, cast iron, carbon steel, stainless steel
填料Packing	柔性石墨 Flexible Graphite

$D\begin{smallmatrix}3\\6\\9\end{smallmatrix}43\begin{smallmatrix}X\\F\\H\end{smallmatrix}-\begin{smallmatrix}6\\10\\16\end{smallmatrix}C$、P、R

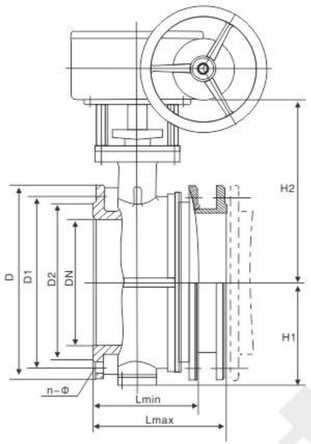

主要连接尺寸Main connection dimensions

公称通径 DN(mm)	1.0MPa							
	D	D1	D2	L max	L min	H1	H2	n-Φd
100	220	180	158	216	174	110	170	8-Φ18
125	250	210	184	232	186	123	182	8-Φ18
150	285	240	212	239	194	140	210	8-Φ22
200	340	295	268	264	214	170	238	8-Φ22
250	395	350	320	296	235	195	270	12-Φ22
300	445	400	370	300	250	222	300	12-Φ22
350	505	460	430	320	270	252	330	16-Φ22
400	565	515	482	332	282	285	368	16-Φ26
450	615	565	532	355	305	310	402	20-Φ26
500	670	620	585	365	315	337	438	20-Φ26
600	780	725	685	420	370	393	490	20-Φ30
700	895	840	800	446	396	450	558	24-Φ30
800	1015	950	905	476	426	515	625	24-Φ33
900	1115	1050	1005	506	456	560	685	28-Φ33
1000	1230	1160	1110	516	466	610	750	28-Φ36
1200	1455	1380	1330	560	510	725	880	32-Φ39
1400	1675	1590	1530	590	540	840	987	36-Φ42
1600	1915	1820	1750	630	585	960	1158	40-Φ48
1800	2115	2020	1950	680	630	1060	1258	44-Φ48
2000	2325	2230	2150	730	680	1165	1365	48-Φ48

注：表中铸铁法兰连接尺寸1.0MPa 标准按GB/T 12741.6标准，钢制法兰按GB/T 9113.1。
Note: The table, cast iron flange connection dimensions according to 1.0MPa Standard GB / T 12741.6 standard, steel flanges according to GB / T 9113.1.

用途及特点Uses and characteristic

本蝶阀采用与阀体相同材料加工成密封圈，采用电动或气动传动。其适用温度随阀体选材料而定，公称压力≤0.6MPa,一般适用于工业、冶金、环保等管道作通风调节介质流量之用。其主要特点为：
1、设计新颖、合理、结构独特，重量轻，启用迅速。
2、力矩小，操作方便，省力灵巧。
3、采用适应的材料以满足低、中、高不同介质温度其及腐蚀介质等。

This butterfly valve uses with the valve chest same material processing seal packing collar, uses electrically operated or the pneumatic actuator. Body temperature with its application materials may be selected, nominal pressure ≤ 0.6MPa, generally applicable to industry, metallurgy, environmental protection, regulating media flow channels for ventilation purposes. The main features are:
1, Novel design, reasonable, unique structure, light weight, enable rapid.
2Torque is small, easy to operate, smart effort.
3, Used to adapt the material to meet the low, medium and high temperature of the different media and the corrosion medium, etc..

采用标准Standard

设计标准Design Standards：GB/T 12238-1989
法兰连接尺寸Flange size：GB/T 9113
结构长度Structure Length：GB/T 12221-1989
压力试验Pressure test：GB/T 13927-92; JB/T 9092-1999

主要性能规范 Main Performance Specifications

公称通径DN	DN(mm)		50～4000			
公称压力Nominal pressure	PN(MPa)		0.05	0.10	0.25	0.6
试验压力 Test pressure	强度试验Strength test		0.075	0.15	0.375	0.9
	密封试验 Seal test	密闭型 Sealed	0.055	0.11	0.275	0.66
		非密闭型 Non-Sealed	≤1.5%泄漏量leakage			
适用介质Applicable medium	煤气、含尘气体、烟道气等 Gas, dust gases, flue gas, etc.					
驱动形式Drive Type	手动、蜗轮、气动、电动传动 Manual, worm gear, pneumatic, electric transmission					

主要零件材料 Main components material

零件名称Part Name	材料Material
阀体Body	Q235A、16猛钢、不锈钢Meng steel, stainless steel
蝶板Disc	Q235A、16猛钢、不锈钢Meng steel, stainless steel
密封圈Ring	Q235A、16猛钢、不锈钢Meng steel, stainless steel
阀杆Stem	2Cr13、不锈钢stainless steel
填料Packing	柔性石墨Flexible Graphite

法兰式通风蝶阀

Flange ventilation butterfly valve

$D_{9}^{3}41^{W}_{H}{}^{0.5}_{-1.0}{}_{-2.5}^{}{}_{6}C$、P

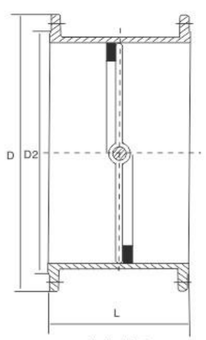

非密封型

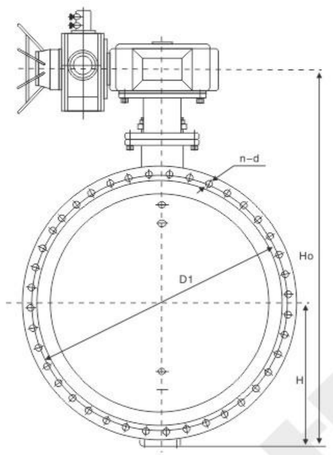

$D_{9}^{3}43^{W}_{H}{}^{0.5}_{-1.0}{}_{-2.5}^{}{}_{6}C$、P

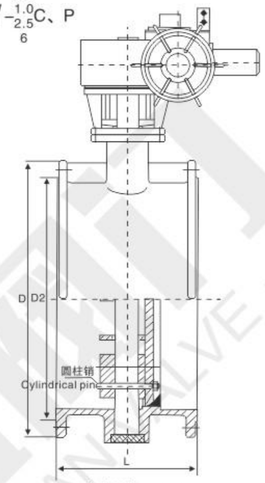

密闭型Sealed

主要连接尺寸Main connection dimensions

公称通径 DN(mm)	L	H	H0	0.05-0.1MPa				0.25MPa				0.6MPa			
				D	D1	D2	n-d	D	D1	D2	n-d	D	D1	D2	n-d
100	127	105	486	210	190	144	4-18	210	190	144	4-18	210	170	144	4-19
125	140	120	516	240	200	174	8-18	240	200	174	8-18	240	200	174	8-19
150	140	132	541	265	225	199	8-18	265	225	199	8-18	265	225	199	8-19
200	152	160	779	320	280	254	8-18	320	280	254	8-18	320	280	254	8-19
250	165	187	836	375	335	309	12-18	375	335	309	12-18	375	335	309	12-19
300	180	220	901	440	395	363	12-22	440	395	363	12-22	440	395	363	12-23
350	180	245	954	490	445	413	12-22	490	445	413	12-22	490	445	413	12-23
400	200	270	1003	540	495	463	16-22	540	495	463	16-22	540	495	463	16-23
450	200	297	1058	595	550	518	16-22	595	550	518	16-22	595	550	518	16-23
500	220	322	1111	645	600	568	20-22	645	600	568	20-22	645	600	568	20-23
600	220	377	1233	755	705	667	20-26	755	705	667	20-26	755	705	667	20-26
700	240	430	1338	860	810	772	24-26	860	810	772	24-26	860	810	772	24-26
800	240	487	1452	975	920	878	24-30	975	920	878	24-30	975	920	878	24-31
900	260	537	1588	1075	1020	978	24-30	1075	1020	978	24-30	1075	1020	978	24-31
1000	260	587	1689	1175	1120	1078	28-30	1175	1120	1078	28-30	1175	1120	1078	28-31
1200	280	702	1938	1375	1320	1280	32-30	1375	1320	1280	32-30	1405	1340	1295	32-34
1400	300	782	2670	1575	1520	1480	36-30	1575	1520	1480	36-30	1630	1560	1510	36-37
1600	320	895	2810	1790	1730	1690	40-30	1790	1730	1690	40-30	1830	1760	1710	40-37
1800	340	995	3020	1990	1930	1890	44-30	1990	1930	1890	44-30	2045	1970	1918	44-40
2000	360	1095	3220	2190	2130	2090	48-30	2190	2130	2090	48-30	2265	2180	2125	48-43
2200	380	1200	3430	2405	2340	2295	52-33	2405	2340	2295	52-33	2475	2390	2335	52-43
2400	400	1310	3650	2605	2540	2495	56-33	2605	2540	2495	56-33	2685	2600	2545	56-43
2600	420	1420	3920	2805	2740	2695	60-33	2805	2740	2695	60-33	2905	2810	2750	60-49
2800	440	1530	4140	3030	2960	2910	64-36	3030	2960	2910	64-36	3115	3020	2960	64-49
3000	460	1640	4360	3230	3160	3110	68-36	3230	3160	3110	68-36	3315	3220	3160	68-49
3200	480	1760	4620	3430	3360	3310	72-36	3430	3360	3310	72-36	3525	3430	3360	72-49
3400	500	1870	4840	3630	3560	3510	76-36	3630	3560	3510	76-36	3735	3640	3560	76-49
3600	520	1980	5060	3840	3770	3720	80-36	3840	3770	3720	80-36	3970	3860	3720	80-56
3800	540	2120	5400	4045	3970	3920	80-39	4045	3970	3920	80-39	4180	4070	3970	80-62
4000	560	2230	5620	4245	4170	4120	84-39	4245	4170	4120	84-39	4380	4270	4170	84-62

蓄能罐式液控缓闭止回蝶阀

Storage tank hydraulic slowly-closing check butterfly valve

用 途Use

蓄能罐式液控缓闭止回蝶阀是我厂在消化吸收欧美液控阀门最并报基础上研制而成的新型产品。目前，该阀是我国最新一代液控蝶阀，它兼有闸阀和止回阀的功能，是一种能按预先调定好的程序，分两阶段快关和缓闭的动作来消除水锤对管网破坏的理想控制设备。

Storage tank liquid control is slowly closing butterfly check valve factory in the digestion and absorption of Europe's most liquid control valves and report formed the basis of the development of new products. At present, the valve is the latest generation of hydraulic control valve in China, which both valve and check valve function, is a good to which it is set by Yu Xian Cheng Xu, ease off a two-stage Kuai closed movements to eliminate water hammer the ideal pipeline damage control equipment.

特 点Feature

本阀的显著特点是：用蓄能罐取代了目前国内几家阀门厂生产的重锤，将重锤势能变为流体蓄能，不仅节省了长期运行支承重锤所耗的能量，改善了液压系统的保压性能，避免了运行时维护人员的人身伤亡事故和精神上的不安全感或恐惧感，而控制机构构思新颖，设计合理，体积小重量轻，结构简单，功能齐全，动作灵活可靠，外形美观、节能节材，维修方便，且维修时不需停止水泵工作等。

本阀具有较完善的液压系统和电气控制系统，可手动油泵即可关闭阀门。阀门可以全开、全闭，也可半开、半闭，运用十分方便。

本阀液压站和电气控制箱可以装在阀体上，也可以与阀体分离就近安装，阀体可以水平布局，也可视现场条件选择。

Notable feature of this valve are: The storage tank valve to replace the current domestic production plants of several heavy hammer, to hammer into a fluid storage potential, not only to save the long run by supporting the heavy hammer of the energy consumption, improve packing properties of the hydraulic system to avoid run-time to maintain the personal casualty and spiritual sense of insecurity or fear, but the idea of controlling body design is reasonable, small size and light weight, simple structure, functional, flexible movement reliable, good appearance, energy-saving materials, easy maintenance, and repair water pumps do not need to stop work.

The valve has a more complete hydraulic system and electric control systems, pumps can be manually close the valve. Valve can be fully open, fully closed, but also semi-open, half closed, use very convenient.

The valve Hydraulic and electrical control box can be in stalled in the body, the body can be separated and close to the installation, the level of distribution valve can also choose visual field conditions.

工作原理Working principle

1、常规工作

（1）阀门开启：启动电机带动油泵运转，液压油经滤网、油泵、单向阀、手动截止阀进入蓄能罐至额定 压力后停止。电磁阀通电，蓄能罐内的压力油经高压胶管进入摆动油缸（以下简称油缸）的尾端，推动活塞杆伸出，带动与之相连的连杆和阀轴，使蝶板旋转开启，液压油从油缸的前部排出，经调整阀，电磁换向阀流回油箱，实现可调的无级匀速开阀。随之，蓄能罐充压力油至额定压力后油泵停止（参见液压原理图）。

（2）阀门关闭：切断电磁阀电源（或反作用型即电磁阀通电），蓄能罐内的压力油进入油缸的前部，推动活塞杆退回，液压油从油缸尾端的快慢开角度调节杆，快关调速阀，慢关调速阀流回油箱，按预先调定的3个控制程序实现关阀。

（3）任意位置停止：蝶阀在开启或关闭过程中，切断油缸的回油，蝶板即停止在任意位置（此功能不能调节流量使用）。

2、电动油泵直接供压力油开、关蝶阀：切断蓄能罐内的压力油、关闭手动形式上阀J1、J2（参见液压原理图）。启动电机、油泵的压力油分别进入油缸的后端或前部即可实现匀速开、闭蝶阀。

3、摇动手动油泵开、关蝶阀：（切断蓄能罐内的压力油和关掉电动油泵）电磁阀得电或失电，摇动手动油泵即可实现开、关蝶阀。

4、蓄能罐补压力油：一般情况下，蓄能罐内的油压为额定值（上限值），当液压系统在长时间的工作状态下，由于有极微量泄漏使油压降至额定值（下限值）（仍高于工作油压值）时，压力控制器动作，启动油泵电机进行补压力油。油泵启动间隔时间为：阀门通径DN≤900大于300小时，DN≥1000大于500小时。

5、蝶阀、水泵联锁保护：当电磁换向阀出现故障（换向失控）或误操作时，联锁装置即发出跳闸信号，使水泵停止运转。

1、Routine work

(1) Valve open: Start running motor driven oil pump, hydraulic oil through the filter, pump, check valve, manual valve into the storage tank to the rated pressure and stop. Solenoid valve power, the pressure of the oil storage tank by the hose into the swing cylinder (hereinafter referred to as tanks) in the end, push rod out, it pulls the connecting rod and the valve shaft to rotate the disc open, hydraulic fluid discharged from the front cylinder, adjusted valves, solenoid valve flow back into the tank to achieve uniform infinitely adjustable opening valve. Along with it, gathers can the pot sufficient pressure oil after the rated pressure the oil pump stops (see the hydraulic schematic diagram).

(2) The valve closed: off solenoid valve power supply (or reaction-type solenoid valve that is energized), the pressure of the oil storage tank into the front cylinder, push rod return, hydraulic fluid from the cylinder end of the speed of opening angle lever, quick closing speed control valve, slow flow back into the fuel tank control valve off, according to preset control program set to achieve 3 off valve.

(3) Any position to stop: butterfly valve in the open or close the process, cut off the fuel tanks back to the oil, the disc that is stopped at any location (not regulate the flow to use this feature).

2、The electric oil pump pressure directly for opening and closing valve: the pressure to cut off oil storage tank, close the valve manually form of J1, J2 (see hydraulic schematic diagram). Start the motor, the pressure of the oil pump into the fuel tanks were back or front can achieve uniform opening and closing valve.

3、Shake hand pump and off valve: (cutting off the pressure of the oil storage tank and turn off the electric pump) electrical or electromagnetic valve may lose electricity, shake the hand pump can be realized and off valve.

4、The oil storage tank fill pressure: Under normal circumstances, the hydraulic storage tank for the rating (upper limit), when the hydraulic system work in the long condition, because a trace amount of leakage so that oil pressure dropped to the rated value (lower limit) (oil pressure is still higher than the value of the work), the pressure controller action, start the pump motor up pressure on oil. Pump start time interval: the valve diameter DN ≤ 900 more than 300 hours, DN ≥ 1000 more than 500 hours.

5、Valve, pump interlock protection: When the solenoid valve malfunction (for the out of control), or misuse, the interlocking device tripping signal is issued, so that pump to stop running.

型号编制说明Model preparation instructions

D X 7 K 4 1 X- 10

- 公称压力（1MPa）Nominal size(1MPa)
- 密封面材料：橡胶Sealing surface Material: Rubber
- 结构形式：垂直板式Structure: Vertical plate
- 连接形式：法兰式Connection: Flanged
- 调节方式：液控Adjusting: Liquid control
- 传动方式：液动Transmission: Hydraulic
- 特征：蓄能罐式 Features: Storage tank
- 类型：蝶阀 Type: Butterfly

DX7K41X-2.5
6
（其它与DX7K41K-10相同）(Other same DX7K41K-10)

DX7K41H-10C
密封面材料：碳素钢（其它与DX7K41X-10相同）
Sealing surface materials: carbon steel (Other DX7K41X-10 the same)

DX7K41H-2.5C
6C
公称压力（0.25MPa）（0.6MPa）其它与DX7K41H-10C相同
Nominal pressure（0.25MPa）（0.6MPa）Other DX7K41H-10C the same

例：1200DX7K41X-10

表示通径DN1200的蓄能罐式液控止回蝶阀，传动方式为液动，法兰连接，结构形式为垂直板式，密封面材料为橡胶，公称压力为1MPa。

Cases: 1200DX7K41X-10

Path DN1200 said energy storage tank liquid butterfly check valve, hydraulic drive way, flange connection, the structure in the form of vertical plate, rubber sealing surface material, nominal pressure 1MPa.

DYVA 东盐阀门 DONGYAN VALVE 国阀品质 东盐匠心
蓄能罐式液控缓闭止回蝶阀
Storage tank hydraulic slowly-closing check butterfly valve

基本参数Basic parameters

公称压力 PN(MPa)	试验压力Ps(MPa)		工作温度Working temperature		适用介质 Applicable medium	
	密封Seal	强度Strength	Dx7k41X-$^{2.5}_{6}$ $_{10}$	Dx7k41H-$^{2.5}_{6}$C $_{10}$	Dx7k41X-$^{2.5}_{6}$ $_{10}$	Dx7k41H-$^{2.5}_{6}$C $_{10}$
1	1.1	1.5	≤80℃	≤250℃	水、油品及其它非腐蚀性液体 Water, oil and other non-corrosive liquids	煤气、蒸气及其它废气体 Gas, steam and other exhaust body
0.6	0.66	0.9				
0.25	0.275	0.375				

特殊参数 Special Parameters

阀门通径Diameter of valve		≤1200	≥1400
开阀时间Valve open time（S）		10～60	30～120
关阀时间（S）Time off valve（S）	快关Fast off	1.2～25	2～30
	慢关Slow off	2～60	4～60
关阀角度 Off valve angle	快关Fast off	65° ±10°	
	慢关Slow off	25° ±10°	

主要零件材料 Main components material

零件名称 Part Name	材料Material	
	Dx7k41X-$^{2.5}_{6}$ $_{10}$	Dx7k41H-$^{2.5}_{6}$C $_{10}$
阀体、蝶板 Body, the disc	灰铸铁 Grey cast iron	碳素钢Carbon Steel
阀轴 Valve shaft	不锈钢 Stainless steel	不锈钢Stainless steel
阀体密封圈 Body Seal	黄铜 Brass	不锈钢Stainless steel
蝶板密封圈 Disc ring	丁晴耐油橡胶 NBR oil resistant rubber	不锈钢Stainless steel

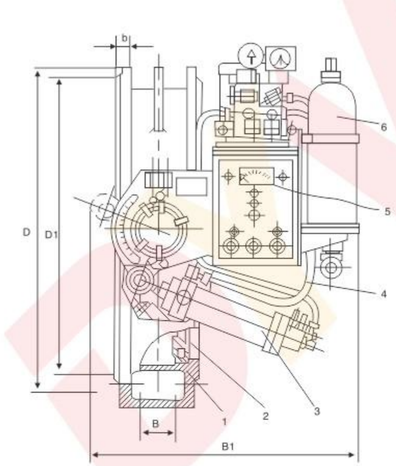

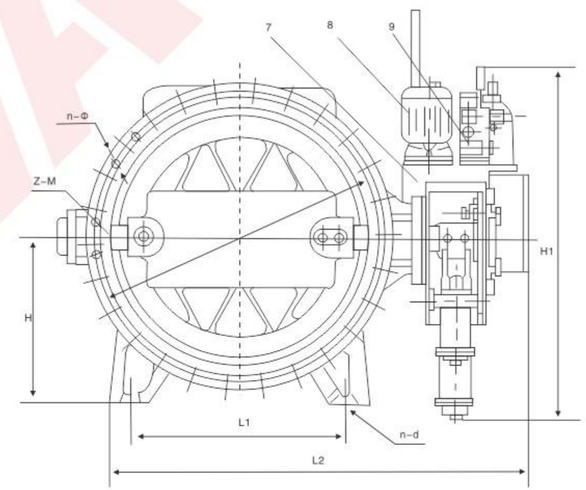

1、阀体Body
2、蝶板Disc
3、摆动油缸Swing cylinder
4、快慢关角度调节杆Speed off the angle lever
5、慢关调速阀Slow-off control valve
6、快关调速阀Faster customs control valve
7、高压胶管High pressure hose
8、手动截止阀J1（控制前蓄能罐）Manual valve J1 (control before the storage tank)
9、手动截止阀J2(控制后蓄能罐) Manual valve J2 (after controlling storage tank)

主要外形尺寸 Main dimensions

公称通径 DN(mm)	Dx7k41$^{H}_{X}$-2.5														
	D	D1	D2	b	L1	L2	B	B1	H	H1	n-Φ	Z-M	n-d	液压站 Hydraulic Station	重量(kg) Weight
600	755	670	705	30	565	1427	/	960	460	1425	16-26	4-24	2-26	XL6.3	1100
700	860	775	810	30	640	1556	/	960	540	1425	20-26	4-24	2-30	XL6.3	1420
800	975	880	920	30	740	1723	/	1135	580	1665	20-30	4-27	2-30	XL10	1870
900	1075	980	1020	30	820	1850	130	1135	630	1665	20-30	4-27	2-30	XL10	2100
1000	1175	1080	1120	30	900	1960	160	1135	690	1665	24-30	4-27	4-30	XL10	2540
1200	1375	1280	1320	30	1070	2229	180	1215	810	1870	28-30	4-27	4-33	XL16	3160
1400	1575	1480	1520	30	1230	2466	220	1215	920	1870	32-30	4-27	4-36	XL16	3770
1600	1790	1690	1730	32	1400	2778	260	1215	920	1870	40-30	/	4-36	XL16	4770
1800	1990	1890	1930	34	1550	3036	290	1420	1140	2540	44-30	/	4-39	XL25	6960
2000	2190	2090	2130	34	1700	3293	330	1420	1250	2540	48-30	/	4-42	XL25	8860
2200	2405	2295	2340	36	1870	3580	400	1420	1360	2540	52-33	/	4-42	XL25	12450
2400	2605	2495	2540	38	2030	3920	450	1620	1480	2750	56-33	/	4-42	XL40	14830
2600	2803	2695	2740	40	2180	4230	500	1620	1600	2750	60-33	/	4-42	XL40	18220
2800	3030	2910	2960	42	2350	4550	550	1620	1720	2750	64-36	/	4-42	XL40	23500
3000	3230	3110	3160	42	2500	4890	600	1890	1840	2960	68-36	/	4-42	XL63	28300
3200	3430	3310	3360	44	2650	5220	600	1890	1960	2960	72-36	/	4-42	XI63	32800

公称通径 DN(mm)	Dx7k41$^{H}_{X}$-6														
	D	D1	D2	b	L1	L2	B	B1	H	H1	n-Φ	Z-M	n-d	液压站 Hydraulic Station	重量(kg) Weight
400	540	465	495	28	410	1190	/	960	340	1425	12-22	4-20	2-22	XL6.3	780
450	595	520	550	28	450	1240	/	960	370	1425	12-22	4-20	2-22	XL6.3	850
500	645	570	600	30	520	1312	/	960	400	1425	16-22	4-20	2-26	XL10	1050
600	755	670	705	30	565	1427	/	960	460	1425	16-26	4-24	2-26	XL10	1200
700	860	775	810	32	640	1586	/	1135	540	1665	20-26	4-24	2-30	XL10	1620
800	975	880	920	34	740	1723	/	1135	580	1665	20-30	4-27	2-30	XL16	2080
900	1075	980	1020	36	820	1849	/	1135	630	1665	20-30	4-27	2-30	XL16	2350
1000	1175	1080	1120	36	900	2000	130	1215	690	1870	24-30	4-27	4-30	XL16	2680
1200	1405	1295	1340	40	1070	2265	160	1215	810	1870	28-30	4-30	4-33	XL25	3360
1400	1630	1510	1560	44	1230	2466	180	1215	920	1870	32-36	4-33	4-36	XL25	4060
1600	1830	1710	1760	48	1400	2806	220	1420	1040	2540	40-36	/	4-36	XL25	5800
1800	2045	1920	1970	50	1550	3036	260	1420	1140	2540	44-39	/	4-39	XL40	7560
2000	2265	2125	2180	54	1700	3285	290	1620	1250	2750	48-42	/	4-42	XL40	9850
2200	2475	2335	2390	60	1870	3605	330	1620	1360	2750	48-42	/	4-42	XL40	13600
2400	2685	2545	2600	62	2030	3950	385	1890	1480	2960	56-42	/	4-42	XL40	15530
2600	2905	2750	2810	64	2180	4310	440	1890	1600	2960	60-48	/	4-48	XI63	18820

备注：1、本阀法兰连接尺寸按GB/T 17241.6、GB/T 9113.1标准制作。
2、本阀结构长度尺寸按GB 12221-89对夹式蝶阀长系列标准制作。
3、本阀出厂，压力试验按GB/T 13927-92规定进行。

Notes: 1、 The valve flange sizes according to GB / T 17241.6, GB / T 9113.1 standard production.
2、The length of the valve structure, size according to GB 12221-89 wafer type butterfly valve produced a long series of standards.
3、The valve factory, pressure test according to GB / T 13927-92 provisions.

主要外形尺寸Main external dimension

公称通径 DN(mm)	Dx7k41$^{H}_{X}$-10														
	D	D1	D2	b	L1	L2	B	B1	H	H1	N-¢	Z-M	n-d	液压站 Hydraulic Station	重量 Weight (kg)
250	395	320	350	28	/	930	/	890	/	1350	12-23	/	/	XL4	510
300	445	370	400	28	315	990	/	890	260	1350	12-23	/	2-22	XL4	550
350	505	430	460	30	340	1100	/	890	320	1350	12-23	4-30	2-18	XL4	640
400	560	482	515	32	410	1210	/	960	340	1425	12-26	4-24	2-22	XL6.3	820
450	615	532	565	32	450	1240	/	960	370	1425	13-26	4-24	2-22	XL6.3	900
500	70	585	620	34	520	1312	/	960	400	1425	16-26	4-24	2-26	XL6.3	1100
600	780	685	725	36	565	1427	/	960	460	1425	16-30	4-27	2-26	XL6.3	1300
700	895	800	810	40	640	1586	/	1135	540	1665	20-30	4-27	2-30	XL10	1800
800	1015	905	950	44	740	1723	/	1135	580	1665	20-30	4-30	2-30	XL10	2300
900	1115	1005	1050	46	820	1847	/	1135	630	1665	24-33	4-30	2-30	XL10	2600
1000	1230	1110	1160	50	900	2000	130	1215	690	1870	24-36	4-33	4-30	XL16	3080
1200	1455	1330	1380	56	1070	2265	160	1215	810	1870	28-39	4-36	4-33	XL16	3800
1400	1675	1530	1590	62	1230	2531	180	1215	920	1870	32-42	4-39	4-36	XL16	4800
1600	1915	1750	1820	68	1400	2875	220	1420	1040	2540	36-48	4-45	4=36	XL25	6920
1800	2115	1950	2020	70	1548	3155	260	1420	1140	2540	40-48	4-45	4-39	XL25	9200
2000	2325	2150	2230	74	1700	3342	290	1620	1250	2750	44-48	4-45	4-42	XL40	12200
2200	2550	2370	2440	80	1870	3660	330	1620	1360	2750	48-56	4-52	4-48	XL40	14200
2400	2760	2570	2650	82	2030	4030	385	1890	1480	2960	52-56	4-52	4-48	XL63	16200
2600	2960	2780	2870	88	2180	4410	440	1890	1600	2960	56-56	4-52	4-48	XI60	18900

备注：1、本阀法兰连接尺寸按GB/T 17241.6、GB/T 9113.1标准制作。
2、本阀结构长度尺寸按GB 12221-89对夹式蝶阀长系列标准制作。
3、本阀出厂，压力试验按GB/T 13927-92规定进行。

Notes: 1、The valve flange sizes according to GB / T 17241.6, GB / T 9113.1 standard production.
2、 The length of the valve structure, size according to GB 12221-89 wafer type butterfly valve produced a long series of standards.
3、The valve factory, pressure test according to GB / T 13927-92 provisions.

结构特点及用途：

本阀是我厂与科研单位共同开发的新产品，并通过了国有级鉴定，是调节和启闭空气、烟气、灰尘及可燃性气体的可靠设备，本阀可与各种执行机构配套组合成不同性能的阀门，叶片多、噪声小、重量轻、操作力矩小、流通能力大、操作方便、价格便宜，特别适用与大口径、大流量、低压差场合，广泛应用与冶金、矿山、建材、化工、电站等工业部门。

Structural characteristics and purpose:

The valve is a brand-new product designed by our factory and scientific research institution and it has been evaluated and appraised by state-level organizations, representing a kind of reliable apparatus for regulating and switching on/off air, fume, dust and combustible gases. The valve could be combined into valves of different properties with a kind of actuators, characteristic of multiple blades, limited noise, low weight, small operating moment, large flow capacity, ease of operation and cost effectiveness. It is especially suitable for occasions with large orifice, high flow and low differential pressure. The product has found wide applications in such industrial sectors including metallurgy, mining, building material, chemical industry, power plant, etc.

主要性能：

公称压力：0.1MPa
适用温度：-20~300℃
泄漏率：普通型≤3%　低泄漏率：≤1%
适用介质：空气、烟气、含粉尘气体、可燃性气体
电源电压：220V或380V.AC
输入信号：0-10（4-20）MA.DC或开关量信号

Key properties:

Nominal pressure: 0.1MPa
Applicable temperature: -20~300℃
Leak rate: regular type =3%　low leak type =1%
Applicable medium: air, fume, dust-containing gas, combustible gas
Power supply voltage: 220V or 380V.AC
Input signal: 0-10 (4-20) MA.DC or binary signal

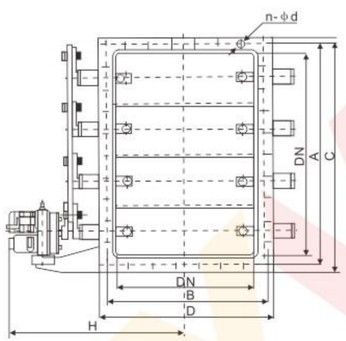

FZKJWDY型电动多叶蝶阀
FZKJWdy electric multi-blade butterfly valve

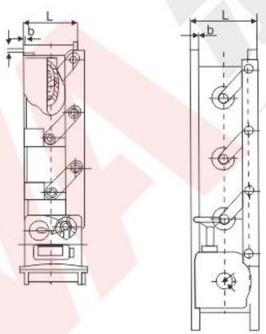

FSWDY型手动多叶蝶阀
FSWdy manual multi-blade butterfly valve

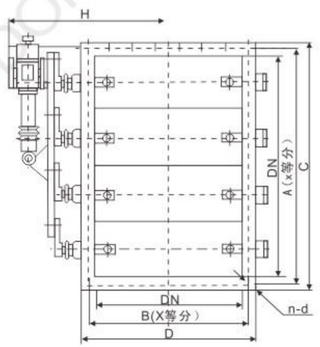

FZDTWdy型电动多叶蝶阀
FZDTWdy electric multi-blade butterfly valve

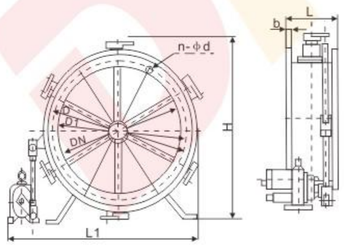

ZKJJWDY型电动多叶蝶阀
ZKJJWdy electric multi-blade butterfly valve

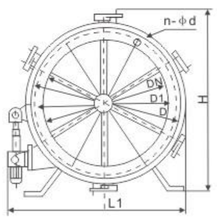

ZDTWDY型电动多叶蝶阀
ZDTWdy electric multi-blade butterfly valve

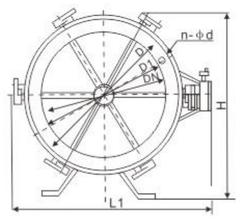

SWDY型手动多叶蝶阀
Swdy manual multi-blade butterfly valve valve

外形及连接尺寸表 External dimensions and connection size:

DN		500	600	700	800	900	100	1200	1400	1600	1800	2000	2200	2400	2600	2800	3000
D		640	755	860	975	1075	1175	1375	1575	1790	1990	2190	2405	2605	2805	3030	3230
D1		600	705	810	920	1020	1120	1320	150	1730	1930	2130	2340	2540	2740	2960	3160
H		890	1020	1110	1240	1340	1440	1660	1860	2060	2260	2500	2700	2900	3100	3300	3530
N-Φd		20-Φ22	20-Φ26	24-Φ26		24-Φ30	28-Φ32	32-Φ30	36-Φ30	40-Φ30	44-Φ30	48-Φ30	52-Φ33	56-Φ33	60-Φ33	64-Φ36	68-Φ36
L		300			350				400				500				
B		18			20					24					28		
叶片数 Number of leaves		3片Film			5片Film				7片Film		9片Film		11片Film		15片Film		
重量Weight（kg）		196	210	230	350	490	560	620	810	1010	1600	2050	2300	2500	2900	3100	3400
ZKJWdy	L1	1100	1210	1380	1480	1580	1675	1895	2145	2345	2545	2745	3125	3325	3525	3740	3940
	配执行器 With actuator	ZKJ-210		ZKJ-310		ZKJ-410			ZKJ-510			ZKJ-610			ZKJ-710		
ZDTWdy	L1	970	1080	120	1320	1530	1630	1840	2065	2270	2465	2680	2965	3165	3365	3565	3765
	配执行器 With actuator	DTⅡ10020M		DTⅡ10040M		DTⅡ30050M			DTⅡ50050M				DTⅡ10060M				
Swdy	L1	900	1000	1150	1200	1410	1510	1710	1940	2145	2345	2545	2845	3000	3400	3400	3600
	配执行器 With actuator	S-01		S-02		S-03			S-04			S-05			S-06		

注：

1、本阀与上述配电动执行器组合外，还可与其它电动、气动、液动、电液动执行器组合使用。
2、有关执行器原现、接线图、技术参数见“附录”。
3、本阀可按用户要求制造（非水平安装时，请注明夹角）。
4、阀门整机质量为阀体质量+执行器质量。
5、需附件请注在合同中注明（如伺服放大器器、电动操作器、控制箱、始点位置开关）。
6、订货时请注明：产品名称、型号、规格、输入信号、泄漏率。

Note:

1. In addition to combination with said electric actuators, the valve could also be combined with other electric, pneumatic, hydraulic and hydroelectric actuators.
2. For the principle, coil and technical parameters of actuator, please see the " Appendices ".
3. The valve could be custom-made (please specify angle of inclusion if the product is not horizontally installed).
4. The complete frame mass of the valve is body mass + actuator mass.
5. Please specify in contract if any accessories are required (e.g. servo amplifier, electric manipulator, control box, starting point position switch, etc.).
6. Please specify product name, model, specification, input signal and leak rate during ordering.

外形及连接尺寸表 External dimensions and connection size:

DNxDN	AxB	CxD	H	N-Φd	b	L	叶片数 Number of leaves	重量 Weight (kg)	FZDTWdy 配电动推杆型号 Models with motorized faders	功率	FZKJWdy 配电动执行器型号 Models with motorized faders	FSWdy 配手动装置型号 Models with manual installation
500x400	565x465	600x500	507	8-Φ17	14	190	2片 Film	201	DTII100-20M	0.37KW	ZKJ-210	S-01
500x500	565x565	600x600	557	20-Φ17				210				
630x400	710x480	750x520	517	20-Φ17	16	210		247				
630x500	710x580	750x620	567	22-Φ17				255				
630x630	710x710	750x750	632	24-Φ17				260				
800x500	880x580	920x620	567	24-Φ17			3片 Film	351	DTII100-30M		ZKJ-310	S-02
800x630	880x710	920x620	632	26-Φ19				366				
800x800	880x880	920x920	717	28-Φ19				375				
990x715	1070x795	1110x835	674	28-Φ19		250		555		0.55KW	ZKJ-410	S-03
1000x630	1080x710	1120x750	632	28-Φ19				551				
1000x800	1080x880	1120x920	717	30-Φ19				565				
1000x1000	1080x1080	1120x1120	817	32-Φ19				640				
1050x800	1330x880	1370x920	717	34-Φ19	18		4片 Film	680	DTII100-30M			
1250x1000	1330 x1080	1370x1120	817	36-Φ19				710				
1250 x1250	1330 x1330	1370x1370	942	40-Φ19				810				
1500x1500	1595 x1595	1640x1640	1077	48-Φ19	20	300		1030				
1600x1000	1695x1095	1740x1140	827	42-Φ19				970				
1600x1250	1695 x1345	1740x1390	995	46-Φ19				996	DTII100-30M	0.75KW	ZKJ-510	S-04
1600x1600	1695 x1695	1740x1740	1170	52-Φ19				1240				
1620x1170	1715 x1265	1760x1310	955	44-Φ19				990				
2000x1250	2095 x1345	2140x1390	955	52-Φ22	22	400	5片 Film	2360	DTII100-40M	0.75KW	ZKJ-610	S-05
2000x1600	2095 x1695	2140x1740	1170	28-Φ22				2800				
2000x2000	2095 x2095	2140x2140	1370	64-Φ22				3030				
2500x1600	2600 x1700	2650x1750	1175	52-Φ22	24		6片 Film	2800				
2500x2000	2600 x2100	2650x2150	1445	72-Φ22				3010				
2500x2500	2600 x2600	2650x2650	1695	76-Φ22				3640	DTII100-40M	1.1KW	ZKJ-710	S-06
3000x2000	3100 x2100	3150x2150	1445	78-Φ22			8片 Film	3620				
3000x2500	3100 x2600	3150 x2650	1695	84-Φ22				4030				
3000x3000	3100 x3100	3150x3150	1945	92-Φ22				4150				

注：
1、本阀与上述配电动执行器组合外，还可与其它电动、气动、液动、电液动执行器组合使用。
2、有关执行器原现、接线图、技术参数见“附录”。
3、本阀可按用户要求制造（非水平安装时，请注明夹角）。
4、阀门整机质量为阀体质量+执行器质量。
5、需附件请注在合同中注明（如伺服放大器器、电动操作器、控制箱、始点位置开关）。
6、订货时请注明：产品名称、型号、规格、输入信号、泄漏率。

Note:
1. In addition to combination with said electric actuators, the valve could also be combined with other electric, pneumatic, hydraulic and hydroelectric actuators.
2. For the principle, coil and technical parameters of actuator, please see the " Appendices ".
3. The valve could be custom-made (please specify angle of inclusion if the product is not horizontally installed).
4. The complete frame mass of the valve is body mass + actuator mass.
5. Please specify in contract if any accessories are required (e.g. servo amplifier, electric manipulator, control box, starting point position switch, etc.).
6. Please specify product name, model, specification, input signal and leak rate during ordering.

外形及连接尺寸表 External dimensions and connection size:

口径	A3xB3	A2xB2	b	N-Φd	L	FD9,41-1 L1	FD9,41-1 执行器 Actuator	FD9,41 执行器 Actuator	FD641 执行器 Actuator	FD341 执行器 Actuator	重量 Weight
A1xb1	240x200	210x170	10	8-Φ12	140	390	DKJ-210	DtII6320-M	QGBII-D63x120	S-01	85
160x120	280x200	250x120				390					95
200x120	330x200	300x170				390					103
250x120	280x240	250x210	14			430					101
200x160	330x240	300x210		10-Φ12		430					108
250x160	330x280	300x250				470					110
250x200	400x240	370X210	16		170	430					135
320x160	400X280	370x250				470					140
320x200	400X330	370x300				520					145
320x250	500X300	465x265		12-Φ15	190	470					151
400x200	500x350	465x315				520					159
400x320	500x420	465x385				590					166
500x200	600X300	565x265				500	DKJ-310	DtII10020-M	QGBII-D100x160	S-02	175
500x250	600X350	565x315				550					181
500x320	600x420	565x385				620					192
500x400	600X500	565x465				700					201
630x250	750x370	710x330	18	14-Φ17	210	550					230
630x320	750x440	710x400				620					238
630x400	750x520	710x400				700					247
630x500	750x620	710x580		16-Φ17		800					255
800x320	920x440	880x400				620					342
800x400	920x520	880x480				700					350
800x500	920X620	800x580				800					351
800x630	920x750	880x710				930					366
1000x320	1120x440	1080x400		18-Φ17		620					513
1000x400	1120x520	1080x480				700					527
1000x500	1120X620	1080x580	18	22-Φ17	250	880	DKJ-410	DtII630-20M	QGBII-D100x160	S-03	539
1000x630	1120x750	1080x710				1010					551
1000x800	1120x920	1080x880				1180					565
1250x400	1370x520	1330x480	20	24-Φ17		700					628
1250x500	1370x620	1330x580				880					643
1250x630	1370x750	1330x710				1010					665
1250x800	1370x920	1330x880		26-Φ17		1180		DtII630-50M	QGBII-D130x250	S-04	681
1250x1000	1370x1120	1330x1080				1380					710
1600x500	1740x640	1695x595	22	28-Φ19	300	940	DKJ-510				929
1600x630	1740x770	1695x725				1070					945
1600x800	1740X940	2095x895		36-Φ19		1240					974
1600x1250	1740x1390	2095x1345				1690					996
2000x800	2140x940	2095x895	24	36-Φ16		1430	DKJ-610	DtII1000-30M	QGBII-D250x250	S-05	1982
2000x1000	2140x1140	2095x1095				1630					2015
2000x1250	2140x1390	2600X1345				1880					2088
2500x1600	2140x1740	2600X1695				2230	DKJ-710	DtII10000-40M	QGBII-D200x250	S-06	2210
3000x2000	2650x1400	2600x1350	28	40-Φ22	400	1880					2360
3000x1600	2650x1750	2600x1700				2230					2800
3000x2000	2650x2150	2600x2100		52-Φ22		2630		DtII10000-42M	QGBII-D250x400		3010
3000x1600	3150x1750	3100x1700				2530					3430
3000x2000	3150x2150	3100x2100				2930					3620
3000x2500	3150x2650	3100x2600		60-Φ22		3430					4010

注：
1、本阀与上述配电动执行器组合外，还可与其它电动、气动、液动、电液动执行器组合使用。
2、有关执行器原现、接线图、技术参数见“附录”。
3、本阀可按用户要求制造（非水平安装时，请在合同中注明夹角）。
4、阀门整机质量为阀体质量+执行器质量。
5、需附件请注在合同中注明（操作器、何服放大器、控制箱、电磁阀空气过滤减压器）。

Note:
1. In addition to combination with said electric actuators, the valve could also be combined with other electric, pneumatic, hydraulic and hydroelectric actuators.
2. For the principle, coil and technical parameters of actuator, please see the " Appendices ".
3. The valve could be custom-made (please specify angle of inclusion if the product is not horizontally installed).
4. The complete frame mass of the valve is body mass + actuator mass.
5. Please specify in contract if any accessories are required (e.g. servo amplifier, electric manipulator, control box, starting point position switch, etc.).

结构特点及用途：

本阀又称风机启动调节阀，本阀可与各种执行机构配套组合使用，具有叶片多、噪声小、重量轻、操作力矩小、流通能力大、操作维护方便、价格便宜，特别适用与大口径、大流量低压差场合（如风机进出口处）。广泛适用与冶金、矿山、建材、化工、电站等行业的通风除尘、供气管道上，对空气、烟气、含粉尘气体、可燃性气体进行启闭和调节。

Structural characteristics and purpose:

The valve is also called fan-started control valve, which could be combined into valves of different properties with a kind of actuators, characteristic of multiple blades, limited noise, low weight, small operating moment, large flow capacity, ease of operation and cost effectiveness. It is especially suitable for occasions with large orifice, high flow and low differential pressure (inlet/outlet of fans). The product has found wide applications in such industrial sectors including metallurgy, mining, building material, chemical industry, power plant, etc. for ventilation dust, and closing/opening and controlling the air, fume, dust-containing gas, combustible gas on gas pipeline.

主要性能：

公称压力：0.05Mpa
适用温度：-20~300℃
泄漏率：普通型≤3%　低泄漏率：≤1%
适用介质：空气、烟气、含粉尘气体、可燃性气体
电源电压：220V或380V.AC

Key properties:

Nominal pressure: 0.05Mpa
Applicable temperature: -20~300℃
Leak rate: regular type =3%　low leak type =1%
Applicable medium: air, fume, dust-containing gas, combustible gas
Power supply voltage: 220V or 380V.AC

型号编制说明：见附录—型号编制说明 格式2

Model preparation Note: See Appendix – 2 for the model description format

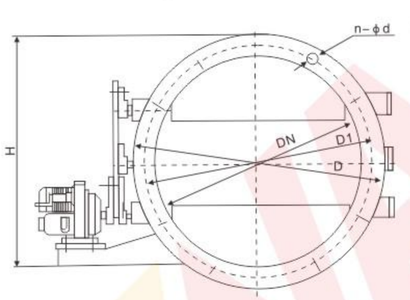

DBD型电动多叶蝶阀
DND electric multi-blade butterfly valve

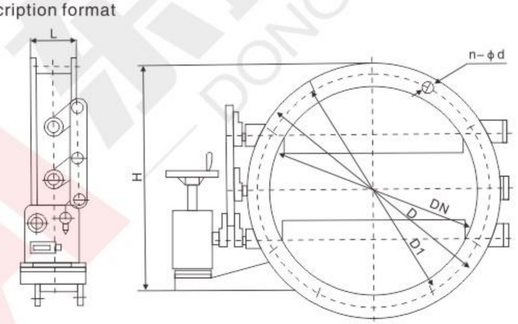

SBD型手动多叶蝶阀
SBD manual multi-blade butterfly valve

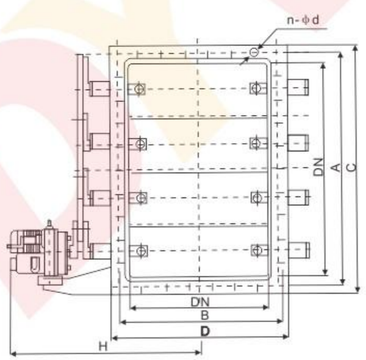

FDBD型电动多叶蝶阀
FDBD electric multi-blade butterfly valve

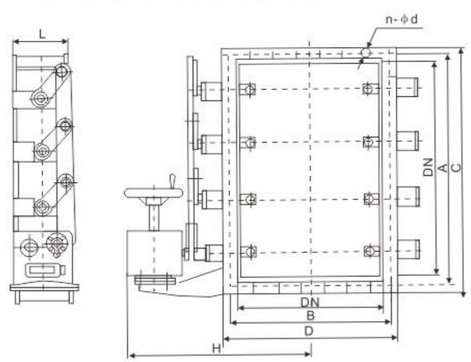

FSBD型手动多叶蝶阀
FSBD manual multi-blade butterfly valve

DYVA 东盐阀门 DONGYAN VALVE 国阀品质 东盐匠心
FDBD-0.5/FSBD-0.5 电(手)动多叶蝶阀(风机专用阀)
Electric (hand) dynamic multi-leaf valve (fan special valve)

外形及连接尺寸(风机专用阀)External dimensions and connection size (blower fan valve only)：

DNxDN	CxD	AxB	L	N-Φd	风机Fans	机号 Machine number	H	FDBD-0.5	FSBD-0.5
128×92	180×148	160x126	160	14-Φ7	9-19	NO.4	462	DKJ-210	S-01
144×104	498×160	176x135				NO.4.5	468		
160×115	214×171	192x150				NO.5	476		
179×129	233×185	212×162				NO.5.6	490		
202×145	256×204	236×180				NO.6.3	480		
196×128	250×134	228×165			9-26	NO.4	484		
221×144	275×200	252×177				NO.4.5	495		
245×160	299×216	284×192				NO.5	585		
174×179	328×235	305×212		18-ϕ7		NO.5.6	518		
309×202	365×261	340×236				NO.6.3	504		
227×163	293×232	270×204		14-ϕ7	9-19	NO.7.1	514		
256×184	322×253	296×228				NO.8	526		
288×207	354×276	330×252		18-ϕ10		NO.9	537		
320×230	386×299	360×276	180			NO.10	563		
359×258	448×350	415×316		18-ϕ12		NO.11.2	574		
400×288	489×380	456×344		20-ϕ12		NO.12.5	604	DKJ-310	
448×322	557×448	516×405		22-ϕ12		NO.14	620		
512×368	621×464	574×400		24-ϕ12		NO.16	628		
348×227	414×296	390×272		20-ϕ10	9-26	NO.7.1	528		
392×256	458×325	432×300				NO.8	543		
441×288	507×357	482×330				NO.9	550		
490×320	556×389	528×356				NO.10	575		
540×358	638×450	600×410	200	26-ϕ12		NO.11.2	605		S-02
613×400	702×492	604×456		28-ϕ12		NO.12.5	626		
686×448	795×564	747×516		30-ϕ12		NO.14	662	DKJ-410	
784×512	893×628	840×588		34-ϕ12		NO.16	759		
256×199	314×254	290×231	160	14-ϕ7	Y5-48	NO.4	514	DKJ-210	S-01
324×252	382×308	360×284	180	18-ϕ7		NO.5	534	DKJ-310	
409×315	466×371	443×348				NO.6.3	566	DKJ-410	
520×400	632×509	580×462		18-ϕ15		NO.8	635		S-02
655×504	771×613	728×570	220	24-ϕ15		NO.10	687		
815×627	935×737	888×690		28-ϕ15		NO.12.5	841		
228×196	277×250	256×228	160	16-ϕ7	4-72	NO.2.8	511	DKJ-210	S-01
256×224	300×278	288×256				NO.3.2	528		
288×252	341×306	320×284				NO.3.6	532		
320×280	374×336	355×315	180	20-ϕ7		NO.4	554	DKJ-310	
360×315	414×371	396×350				NO.4.5	566		
400×350	456×406	435×385		24-ϕ7		NO.5	529		

注：
1、本阀与上述配电动执行器组合外，还可与其它电动、气动、液动、电液动执行器组合使用。
2、有关执行器原理、接线图、技术参数见“附录”。
3、本阀可按用户要求制造（非水平安装时，请注明夹角）。
4、需附件请注在合同中注明（如何服放大器、电动操作器、控制箱、始点位置开关）。
5、订货时请注明：产品名称、型号、规格、输入信号、泄漏率。

Note:
1. In addition to combination with said electric actuators, the valve could also be combined with other electric, pneumatic, hydraulic and hydroelectric actuators.
2. For the principle, coil and technical parameters of actuator, please see the " Appendices ".
3. The valve could be custom-made (please specify angle of inclusion if the product is not horizontally installed).
4. The complete frame mass of the valve is body mass + actuator mass.
5. Please specify product name, model, specification, input signal and leak rate during ordering.

FDBD-0.5/FSBD-0.5 电(手)动多叶蝶阀(风机专用阀)

Electric (hand) dynamic multi-leaf valve (fan special valve)

外形及连接尺寸(风机专用阀)External dimensions and connection size (blower fan valve only):

DNxDN	CxD	AxB	L	N-ϕd	风机型号 Fan Model	机号Machine Number	H	FDBD-0.5	FSBD-0.5
480×420	511×455	536×476	180	24-ϕ7	4-72	NO.6	618	DKJ-310	S-02
640×560	700×625	746×669	200	20-ϕ15		NO.8	715		
800×700	860×765	900×809	220	20-ϕ15		NO.10	785	DKJ-410	
960×840	1008×900	1066×949	240	22-ϕ15		NO.12	919		
1280×1120	1340×1188	1380×1232	260	38-ϕ15		NO.14	1056	DKJ-510	S-04
1600×1400	1672×1476	1735×1558	320	40-ϕ15	Y4-73	NO.16	1329	DKJ-610	
720×520	777×580	826×629	220	24-ϕ15		NO.8	760	DKJ-410	S-03
810×586	868×650	916×694	220			NO.9	810		
900×650	959×710	1006×759	240			NO.10	836		
990×713	1048×780	1069×724	260	28-ϕ15		NO.11	862		
1080×780	1144×846	1186×887				NO.12	911		
1260×910	1336×990	1389×1042				NO.14	963	DKJ-510	
1540×1010	1312×1120	1569×1172	320	32-ϕ10		NO.16	994	DKJ-610	S-04
1620×910	1110×1260	1779×1338				NO.18	1156		
1800×1300	1890×1386	1959×1462	420		G4-73	NO.20	1253		
1980×1430	2070×1560	2139×1596		36-ϕ15		NO.22	1385		
2250×1625	2376×1759	2459×1841	450	42-ϕ15		NO.25	1581		
2520×1805	2660×1905	2732×2030		48-ϕ15		NO.28	1718		

DBD、SBD-0.5电（手）动多叶蝶阀外形及连接尺寸表（风机专用阀）

External and connection dimensions of SBD and SBD-0.5 electric (manual) multi-blade butterfly valve (blower fan valve only)

DN	D1	D	L	N-ϕd	风机型号 Fan Model	H	DBD-0.5	SBD-0.5
280	306	324	160	8-ϕ10	4-72	524	DKJ-210	S-01
300	350	367	180	16-ϕ7		567		
360	394	416		16-ϕ7		616		
450	490	512		16-ϕ10		712		
500	550	572				772		
600	650	676	200			876		
180	205	230	160	8-ϕ7	9-19 9-26	435		
200	225	250				455		
224	254	284				462		
250	281	310		8-ϕ10		498		
280	320	360				523		
315	355	395	180			600		
355	395	435				640		
400	450	500		8-ϕ12		705		
450	500	550				750		
500	560	620		12-ϕ12		820		
560	620	680	200			900		
630	690	750				950		
710	770	830		16-ϕ12		1030		
800	860	920	220		9-26	1120	DKJ-310	S-02
900	970	1040		16-ϕ15		1240		
1000	1065	1110	260		4-72 Y5-48	1310		
1100	1170	1220		20-ϕ15		1420		
1120	1190	1250	280	24-ϕ15	Y5-48 G4-73-11 Y4-73-11	450	DKJ-410	S-03
1200	1270	1330				1530		
1400	1420	1520	320			1720		
1600	1660	1700		28-ϕ15		1900	DKJ-510	S-04
1800	1860	1900	420			2100		
2000	2070	2140		32-ϕ15		2240		
2200	2260	2300	450	36-ϕ15		2500	DKJ-610	S-05
2500	2560	2600				2800		
2800	2860	2900	500			3100		

DYVA 浙江东盐阀门有限公司
ZHEJIANG DONGYAN VALVE CO., LTD

地址/Add：浙江省温州市温州湾新区永兴街道滨海三路22号
No. 22 Binhai Third Road, Yongxing Street, Wenzhou Bay New Area, Wenzhou City, Zhejiang Province
手机/Mob：131 8581 5898（王先生）/ 135 4634 0322（薛玉印）
电话/Tel：0577-85851685
网址/Web：www.chylv.com

企业官网/Web